ANT1_LB+N77

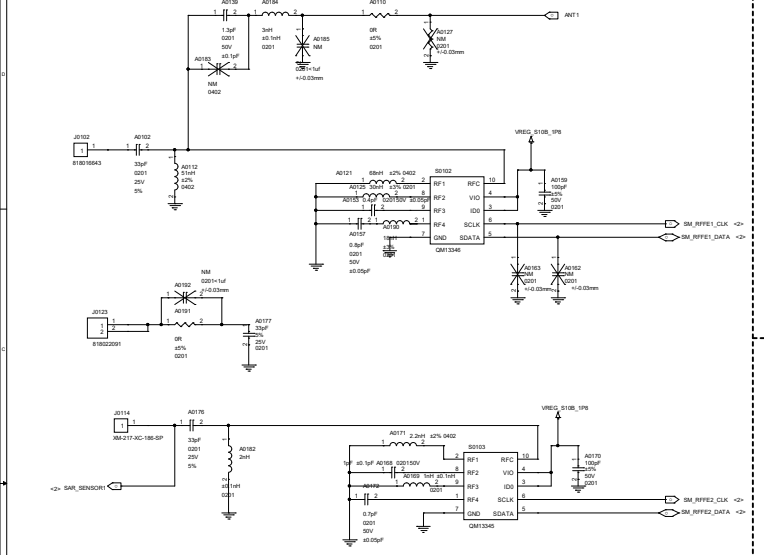

ANT10 N77

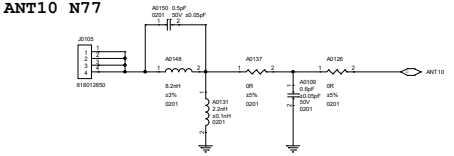

ANT4 MHB

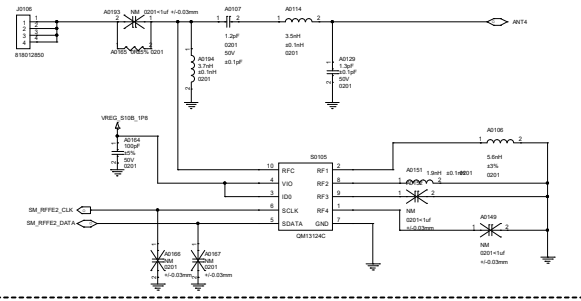

ANT5_MHB

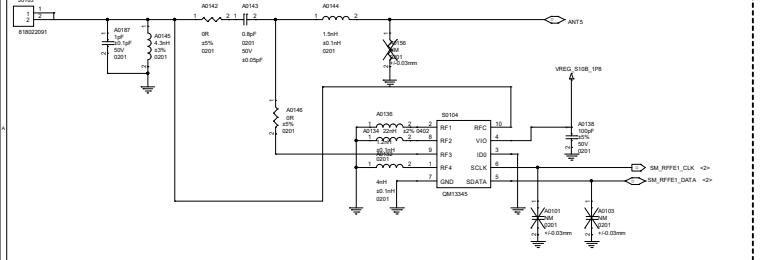

环形垫片　接地弹片　线夹　DECO 接地

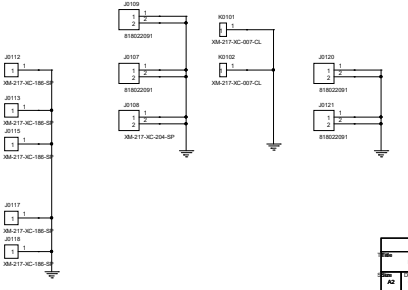

Title:	LSB_MAIN
Size: A2	Document Number: <Doc>
Rev: P48	
Date: Friday, November 26, 2021	Sheet 2 of 23

ANT18_Combo（GPSL1+WiFi2.4）

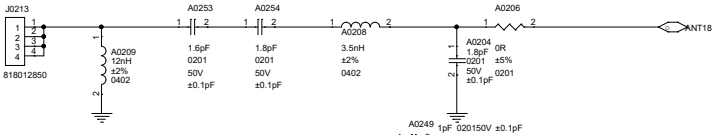

ANT19_WIFI6E

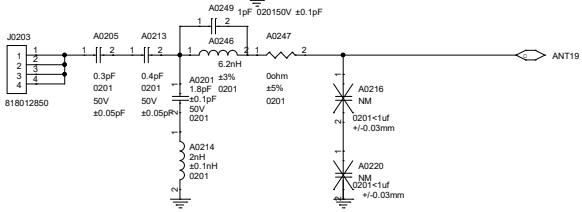

ANT11_N77

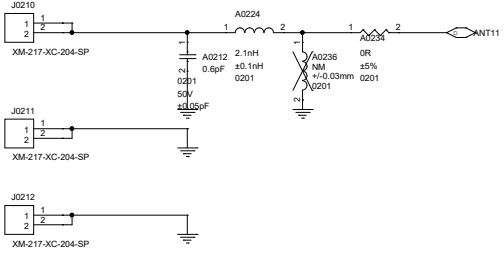

ANT17_WIFI_MIMO_LDS

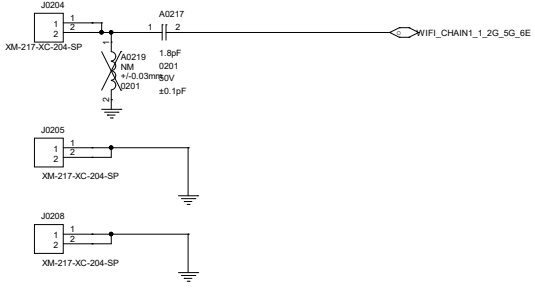

SAR sensor2

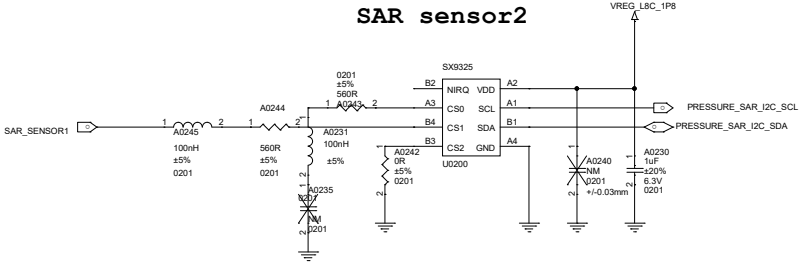

ANT20 GPSL5

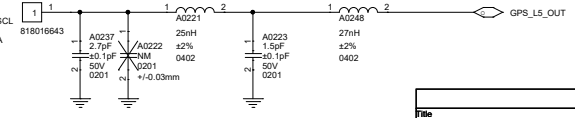

Title	L10_MAIN		
Size A3	Document Number <Doc>		Rev P1B
Date: Friday, November 26, 2021		Sheet 3 of 75	

ANT3

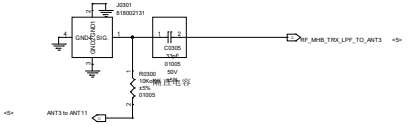

ANT6

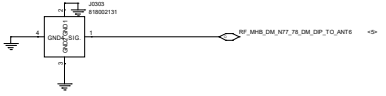

ANT4

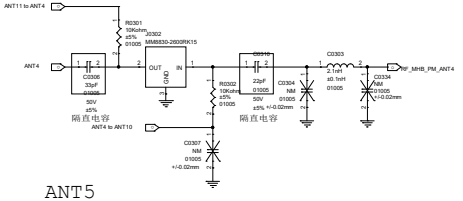

ANT5

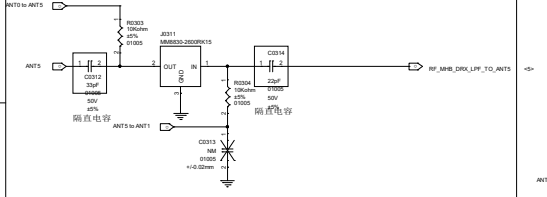

ANT0

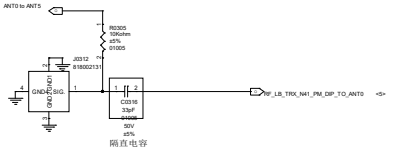

ANT1

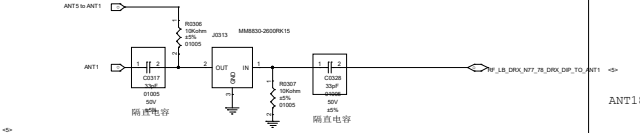

ANT10

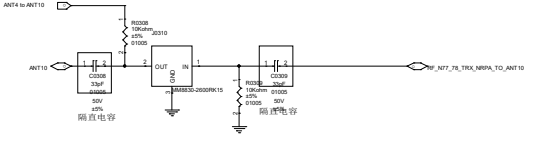

ANT11

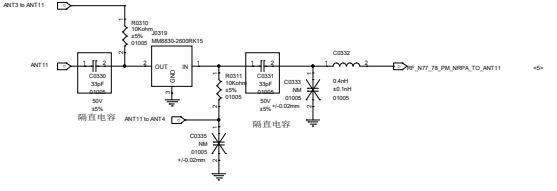

WIFI+GPS

ANT16 WIFI2.4G+WIFI6E CHAIN1_0

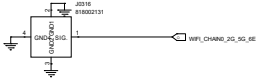

ANT18 GPS L1+WIFI2.4 CHAIN1_1

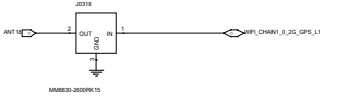

ANT19 GPS L5+WIFI6E CHAIN1_1

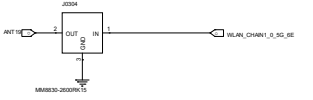

Title	L10_MAIN		
Size A2	Document Number RF CONN		Rev P0
Date: Friday, November 26, 2021	Sheet 4 of 75		

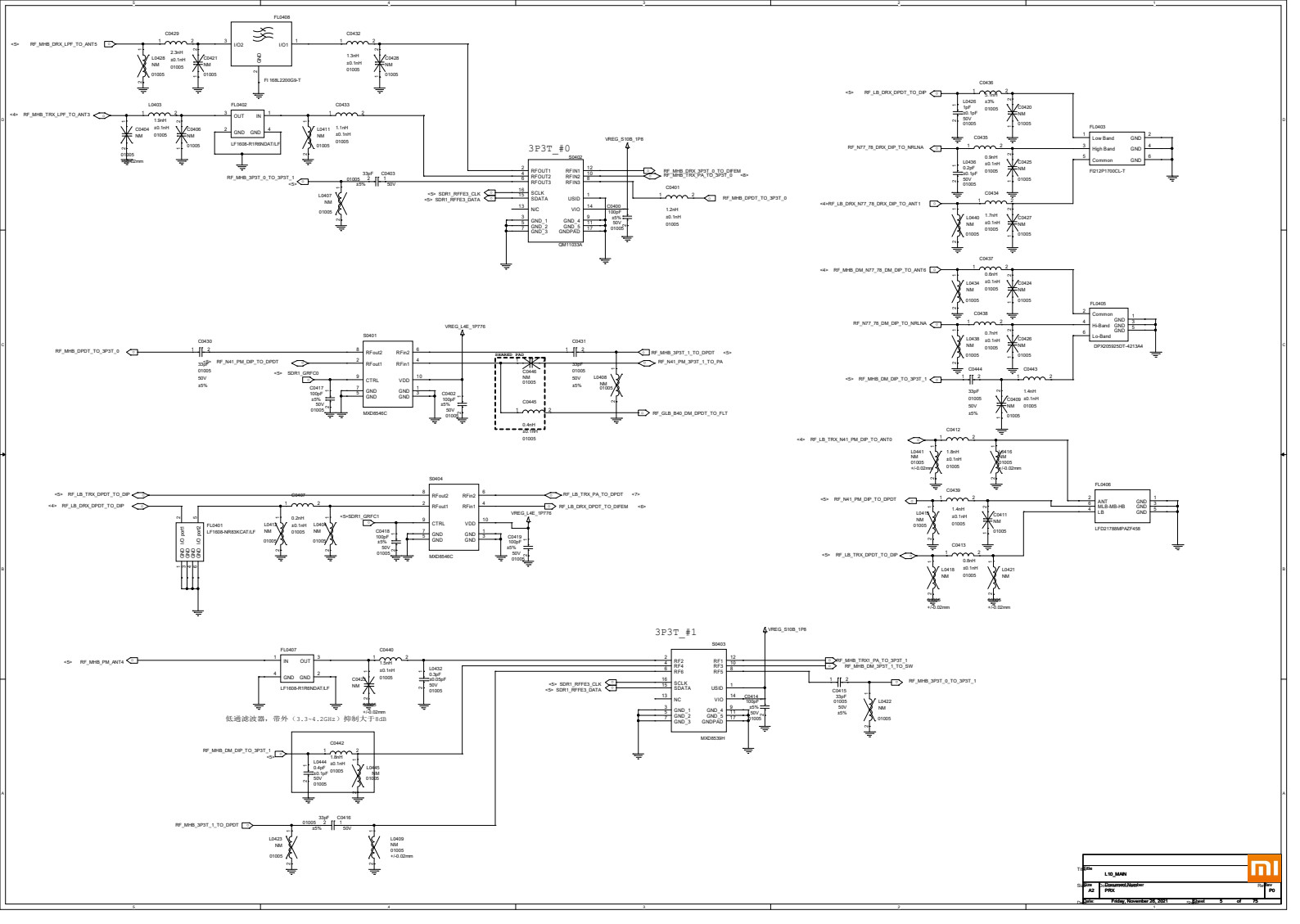
3P3T_#0
3P3T_#1
FL0408
FL0402
FL0403
FL0405
FL0406
FL0407
FL0401
S0401
S0404
S0403
QM11033A
MXD8546C
MXD8539H
LF1608-R1RBNDAT/LF
FGI2P1700CL-T
DPX2D5925DT-4213A4
LFD21788MPAZF458
低通滤波器，带外（3.3~4.2GHz）抑制大于8dB
L10_MAIN
Friday, November 26, 2021
5
75

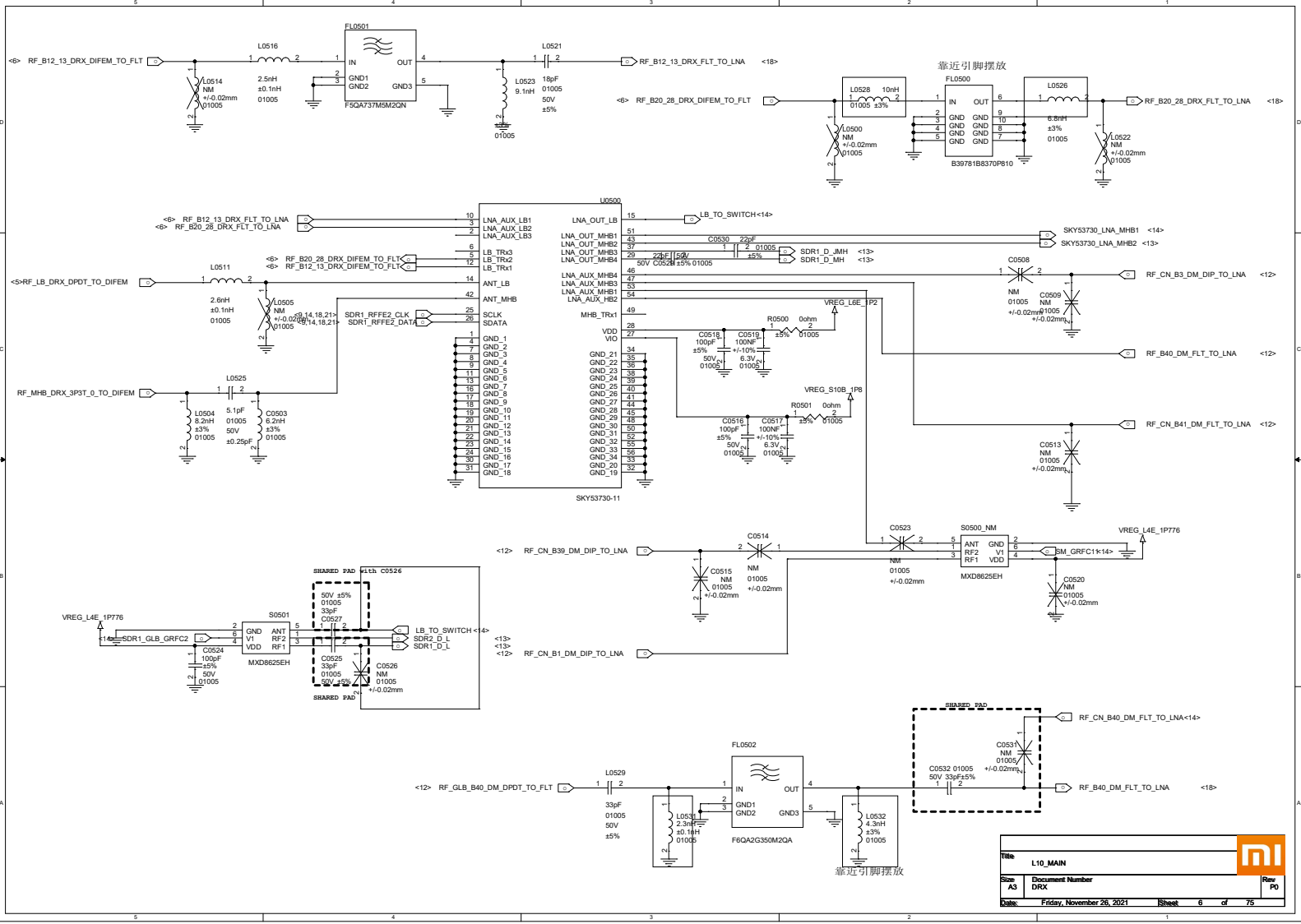
RF_B12_13_DRX_DIFEM_TO_FLT
L0516
2.5nH
±0.1nH
01005
L0514
NM
+/-0.02mm
01005
FL0501
IN
OUT
GND1
GND2
GND3
F5QA737M5M2QN
L0521
18pF
01005
50V
±5%
L0523
9.1nH
01005
RF_B12_13_DRX_FLT_TO_LNA
靠近引脚摆放
RF_B20_28_DRX_DIFEM_TO_FLT
L0528
10nH
01005 ±3%
L0500
NM
+/-0.02mm
01005
FL0500
B39781B8370P810
L0526
6.8nH
±3%
01005
L0522
NM
+/-0.02mm
01005
RF_B20_28_DRX_FLT_TO_LNA
RF_B12_13_DRX_FLT_TO_LNA
RF_B20_28_DRX_FLT_TO_LNA
U0500
LNA_AUX_LB1
LNA_AUX_LB2
LNA_AUX_LB3
LB_TRx3
LB_TRx2
LB_TRx1
ANT_LB
ANT_MHB
SCLK
SDATA
GND_1
GND_2
GND_3
GND_4
GND_5
GND_6
GND_7
GND_8
GND_9
GND_10
GND_11
GND_12
GND_13
GND_14
GND_15
GND_16
GND_17
GND_18
LNA_OUT_LB
LNA_OUT_MHB1
LNA_OUT_MHB2
LNA_OUT_MHB3
LNA_OUT_MHB4
LNA_AUX_MHB4
LNA_AUX_MHB3
LNA_AUX_MHB1
LNA_AUX_HB2
MHB_TRx1
VDD
VIO
GND_21
GND_22
GND_23
GND_24
GND_25
GND_26
GND_27
GND_28
GND_29
GND_30
GND_31
GND_32
GND_33
GND_34
GND_20
GND_19
SKY53730-11
LB_TO_SWITCH<14>
SKY53730_LNA_MHB1 <14>
SKY53730_LNA_MHB2 <13>
SDR1_D_JMH <13>
SDR1_D_MH <13>
C0530 22pF
C0524 22pF 50V ±5% 01005
RF_B20_28_DRX_DIFEM_TO_FLT
RF_B12_13_DRX_DIFEM_TO_FLT
RF_LB_DRX_DPDT_TO_DIFEM
L0511
2.6nH
±0.1nH
01005
L0505
NM
+/-0.02mm
01005
SDR1_RFFE2_CLK
SDR1_RFFE2_DATA
VREG_L6E_1P2
R0500 0ohm
±5% 01005
C0518 100pF ±5% 50V 01005
C0519 100NF +/-10% 6.3V 01005
C0508
NM
01005
+/-0.02mm
C0509
NM
01005
+/-0.02mm
RF_CN_B3_DM_DIP_TO_LNA
RF_B40_DM_FLT_TO_LNA
RF_MHB_DRX_3P3T_0_TO_DIFEM
L0525
5.1pF
01005
50V
±0.25pF
L0504
8.2nH
±3%
01005
C0503
6.2nH
±3%
01005
VREG_S10B_1P8
R0501 0ohm
±5% 01005
C0516 100pF ±5% 50V 01005
C0517 100NF +/-10% 6.3V 01005
RF_CN_B41_DM_FLT_TO_LNA
C0513
NM
01005
+/-0.02mm
C0523
NM
01005
+/-0.02mm
S0500_NM
ANT
RF2
RF1
GND
V1
VDD
MXD8625EH
VREG_L4E_1P776
SM_GRFC1 <14>
C0520
NM
01005
+/-0.02mm
C0514
NM
01005
+/-0.02mm
C0515
NM
01005
+/-0.02mm
RF_CN_B39_DM_DIP_TO_LNA
RF_CN_B1_DM_DIP_TO_LNA
SHARED PAD with C0526
50V ±5%
01005
33pF
C0527
C0525
33pF
01005
50V ±5%
C0526
NM
01005
+/-0.02mm
SHARED PAD
S0501
VREG_L4E_1P776
SDR1_GLB_GRFC2
C0524
100pF
±5%
50V
01005
LB_TO_SWITCH <14>
SDR2_D_L
SDR1_D_L
SHARED PAD
RF_CN_B40_DM_FLT_TO_LNA<14>
C0531
NM
01005
+/-0.02mm
C0532 01005
50V 33pF±5%
RF_B40_DM_FLT_TO_LNA
RF_GLB_B40_DM_DPDT_TO_FLT
L0529
33pF
01005
50V
±5%
L0530
2.3nH
±0.1nH
01005
FL0502
F6QA2G350M2QA
L0532
4.3nH
±3%
01005
靠近引脚摆放
Title
L10_MAIN
Size
A3
Document Number
DRX
Rev
P0
Date:
Friday, November 26, 2021
Sheet
6
of
75

LB TAS DPDT

U0600
CN SKY58080-11
GLB SKY58081-11

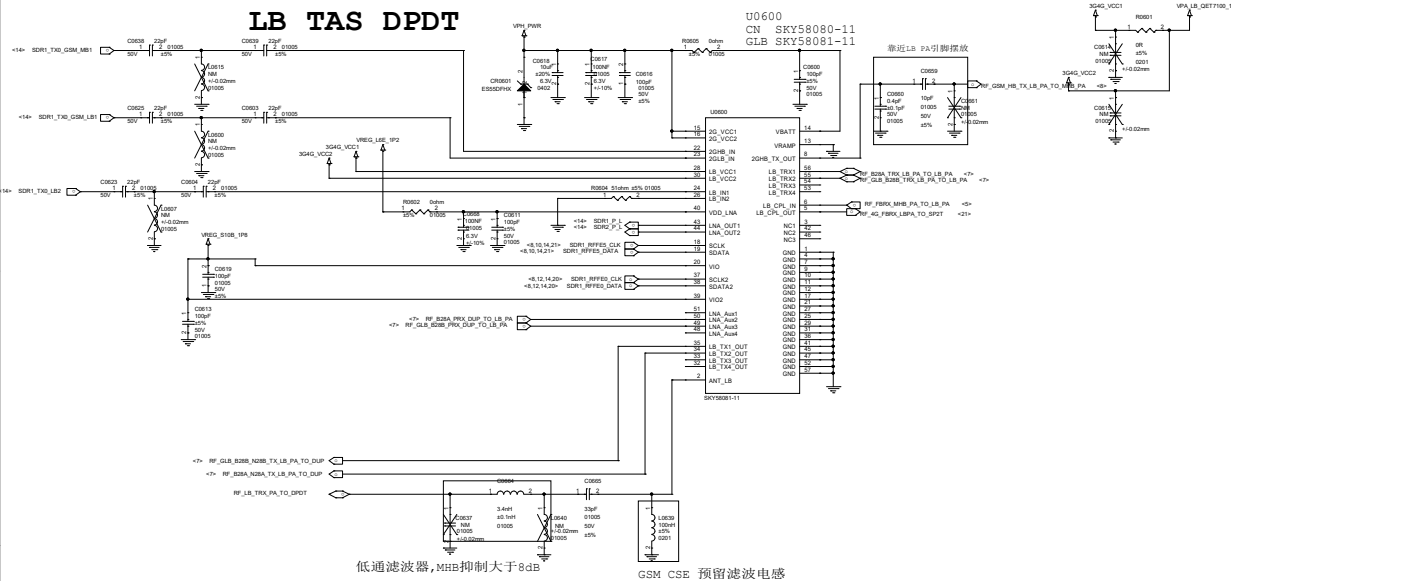

低通滤波器,MHB抑制大于8dB

GSM CSE 预留滤波电感

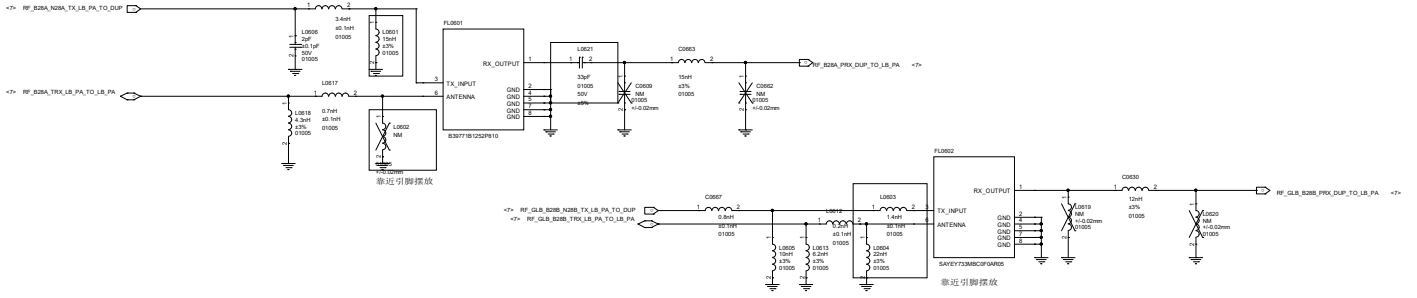

FL0602
GLB B28B SAYEY733MBC0F0AR05

Title	L10_MAIN		
Size A2	Document Number LB PA		Rev P0
Date: Friday, November 26, 2021	Sheet 7 of 75		

MHB S-PAD

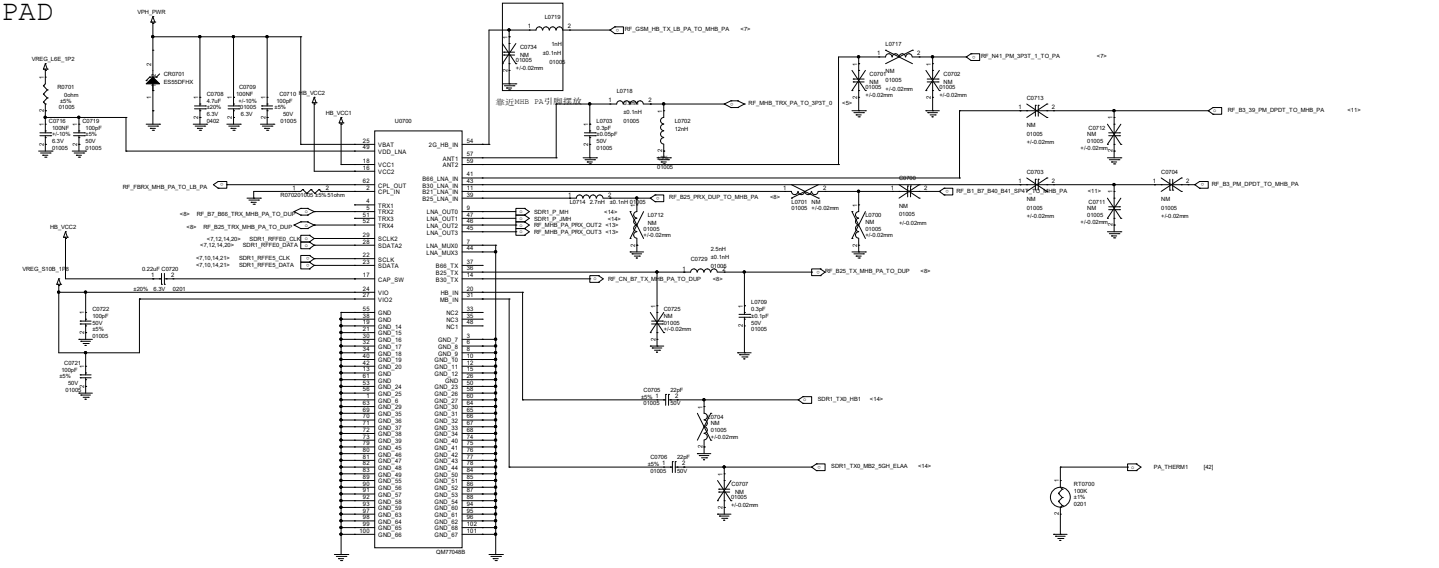

File	L10_MAIN		
Size A2	Document Number MHB PA		Rev PQ
Date: Friday, November 26, 2021	Sheet 8 of 75		

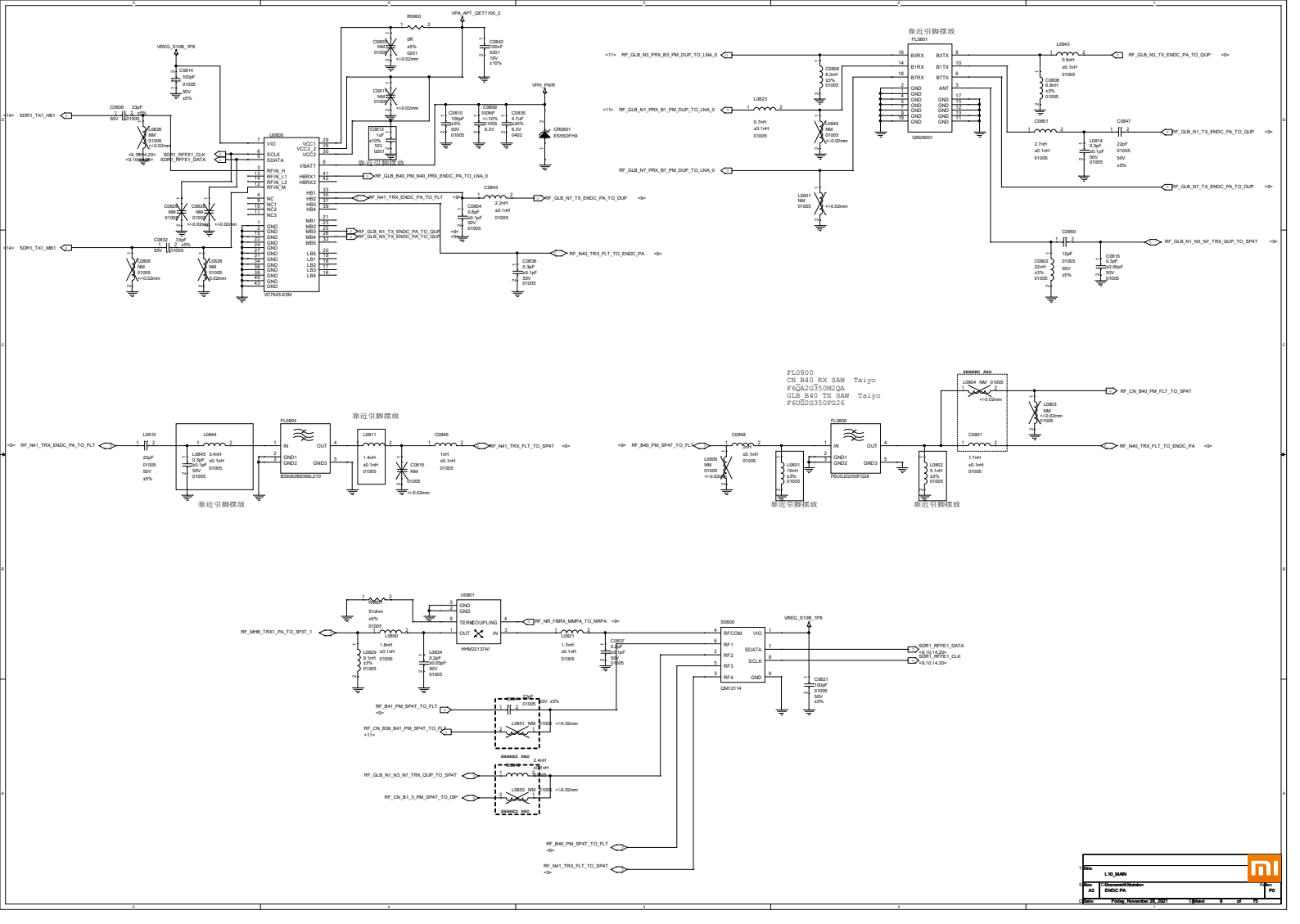
U0800
VC7643-63M
FL0801
QM28001
FL0804
FL0800
U0801
HHM2137A1
S0800
QM12114
靠近引脚摆放
FL0800
CN_B40_RX SAW Taiyo
F6QA2G35DM2QA
GLB_B40_TX SAW Taiyo
F6UG2G350FG26
SDR1_TX1_HB1
SDR1_TX1_MB1
SDR1_RFFE1_CLK
SDR1_RFFE1_DATA
RF_GLB_N3_PRX_B3_PM_DUP_TO_LNA_0
RF_GLB_N1_PRX_B1_PM_DUP_TO_LNA_0
RF_GLB_N7_PRX_B7_PM_DUP_TO_LNA_0
RF_GLB_N3_TX_ENDC_PA_TO_QUP
RF_GLB_N1_TX_ENDC_PA_TO_QUP
RF_GLB_N7_TX_ENDC_PA_TO_DUP
RF_GLB_N1_N3_N7_TRX_QUP_TO_SP4T
RF_GLB_B40_PM_N40_PRX_ENDC_PA_TO_LNA_0
RF_N41_TRX_ENDC_PA_TO_FLT
RF_GLB_N7_TX_ENDC_PA_TO_DUP
RF_GLB_N1_TX_ENDC_PA_TO_QUP
RF_GLB_N3_TX_ENDC_PA_TO_QUP
RF_N40_TRX_FLT_TO_ENDC_PA
RF_N41_TRX_FLT_TO_SP4T
RF_CN_B40_PM_FLT_TO_SP4T
RF_B40_PM_SP4T_TO_FLT
RF_MHB_TRX1_PA_TO_3P3T_1
RF_NR_FBRX_MMPA_TO_NRPA
RF_B41_PM_SP4T_TO_FLT
RF_CN_B39_B41_PM_SP4T_TO_FLT
RF_GLB_N1_N3_N7_TRX_QUP_TO_SP4T
RF_CN_B1_3_PM_SP4T_TO_DIP
RF_B40_PM_SP4T_TO_FLT
RF_N41_TRX_FLT_TO_SP4T
VREG_S10B_1P8
VPA_APT_CETT100_2
VPH_PWR
L10_MAIN
A2
ENDC PA
Friday, November 26, 2021
9
75
P0

QET7100_1

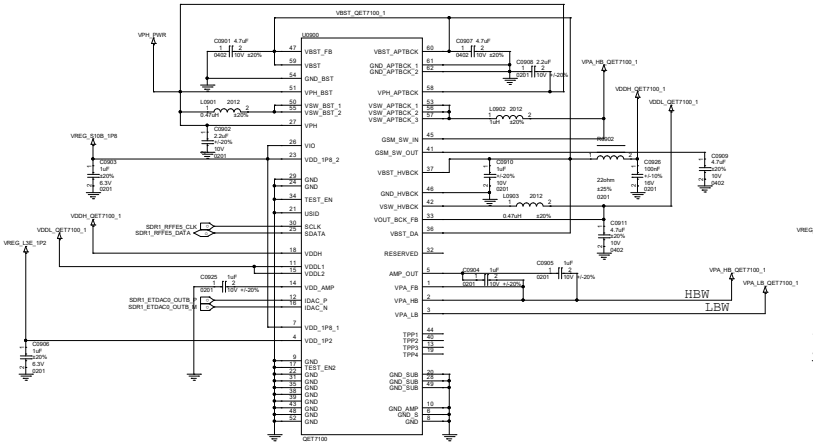

QET7100_2

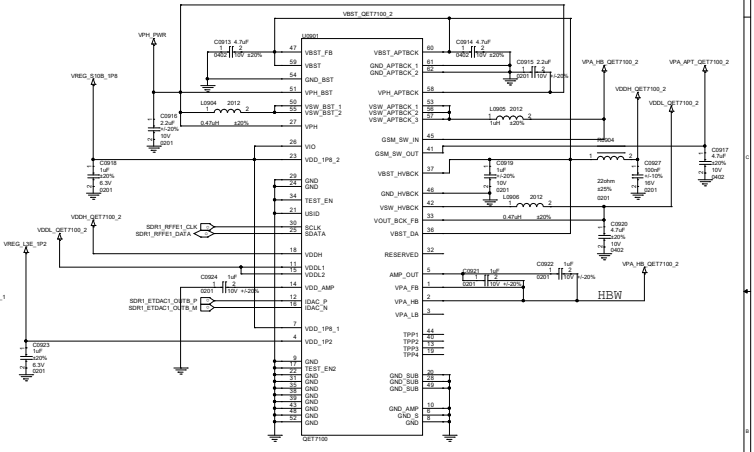

Title	L10_MAIN		
Size	Document Number		Rev
A2	RF DC-DC		P0
Date: Friday, November 26, 2021		Sheet 10 of 75	

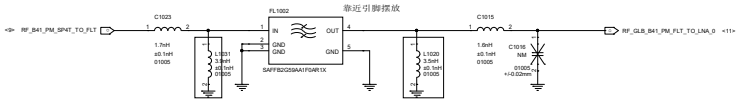
靠近引脚摆放
<9> RF_B41_PM_SP4T_TO_FLT
C1023
1.7nH
±0.1nH
01005
L1031
3.5nH
±0.1nH
01005
FL1002
IN
GND
GND
OUT
GND
SAFFB2G59AA1F0AR1X
L1030
3.5nH
±0.1nH
01005
C1015
1.6nH
±0.1nH
01005
C1016
NM
01005
+/-0.02mm
RF_GLB_B41_PM_FLT_TO_LNA_0 <11>

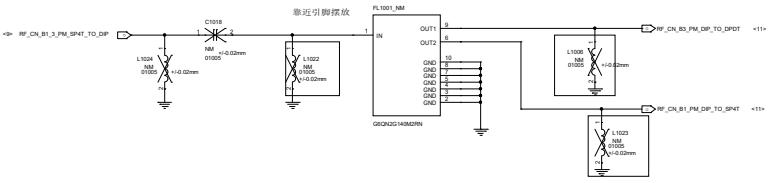
靠近引脚摆放
<9> RF_CN_B1_3_PM_SP4T_TO_DIP
C1018
NM
01005
+/-0.02mm
L1024
NM
01005
+/-0.02mm
L1022
NM
01005
+/-0.02mm
FL1001_NM
IN
OUT1
OUT2
GND
GND
GND
GND
GND
GND
GND
GND
GSCDN2G140M2RN
L1006
NM
01005
+/-0.02mm
RF_CN_B3_PM_DIP_TO_DPDT <11>
RF_CN_B1_PM_DIP_TO_SP4T <11>
L1023
NM
01005
+/-0.02mm

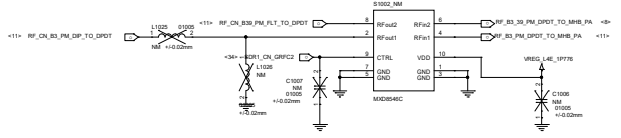
S1002_NM
<11> RF_CN_B3_PM_DIP_TO_DPDT
L1025
01005
NM
+/-0.02mm
<11> RF_CN_B39_PM_FLT_TO_DPDT
<34> SDR1_CN_GRFC2
L1026
NM
+/-0.02mm
C1007
NM
01005
+/-0.02mm
RFout2
RFout1
CTRL
GND
GND
RFin2
RFin1
VDD
GND
GND
MXD8546C
RF_B3_39_PM_DPDT_TO_MHB_PA <8>
RF_B3_PM_DPDT_TO_MHB_PA <11>
VREG_L4E_1P776
C1006
NM
01005
+/-0.02mm

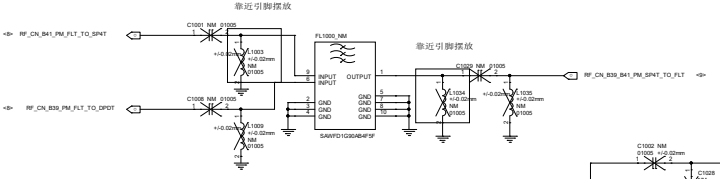
靠近引脚摆放
<8> RF_CN_B41_PM_FLT_TO_SP4T
C1001_NM_01005
+/-0.02mm
L1003
+/-0.02mm
NM
01005
<8> RF_CN_B39_PM_FLT_TO_DPDT
C1008_NM_01005
+/-0.02mm
L1009
+/-0.02mm
NM
01005
FL1000_NM
INPUT
INPUT
OUTPUT
GND
GND
GND
GND
GND
GND
GND
GND
SAWFD1G360AB4F5F
靠近引脚摆放
C1002_NM_01005
+/-0.02mm
L1034
+/-0.02mm
NM
01005
+/-0.02mm
L1035
+/-0.02mm
NM
01005
RF_CN_B39_B41_PM_SP4T_TO_FLT <9>

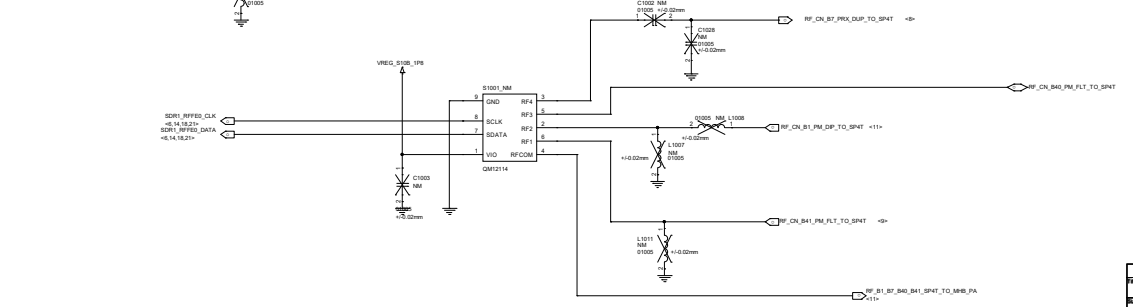
C1002_NM
01005
+/-0.02mm
C1028
NM
01005
+/-0.02mm
RF_CN_B7_PRX_DUP_TO_SP4T <8>
RF_CN_B40_PM_FLT_TO_SP4T
VREG_S10B_1P8
S1001_NM
GND
SCLK
SDATA
VIO
RF4
RF3
RF2
RF1
RFCOM
QM12114
SDR1_RFFE0_CLK
<6,14,18,21>
SDR1_RFFE0_DATA
<6,14,18,21>
C1003
NM
01005
+/-0.02mm
01005_NM_L1008
RF_CN_B1_PM_DIP_TO_SP4T <11>
L1007
NM
01005
+/-0.02mm
RF_CN_B41_PM_FLT_TO_SP4T <9>
L1011
NM
01005
+/-0.02mm
RF_B1_B7_B40_B41_SP4T_TO_MHB_PA
<11>

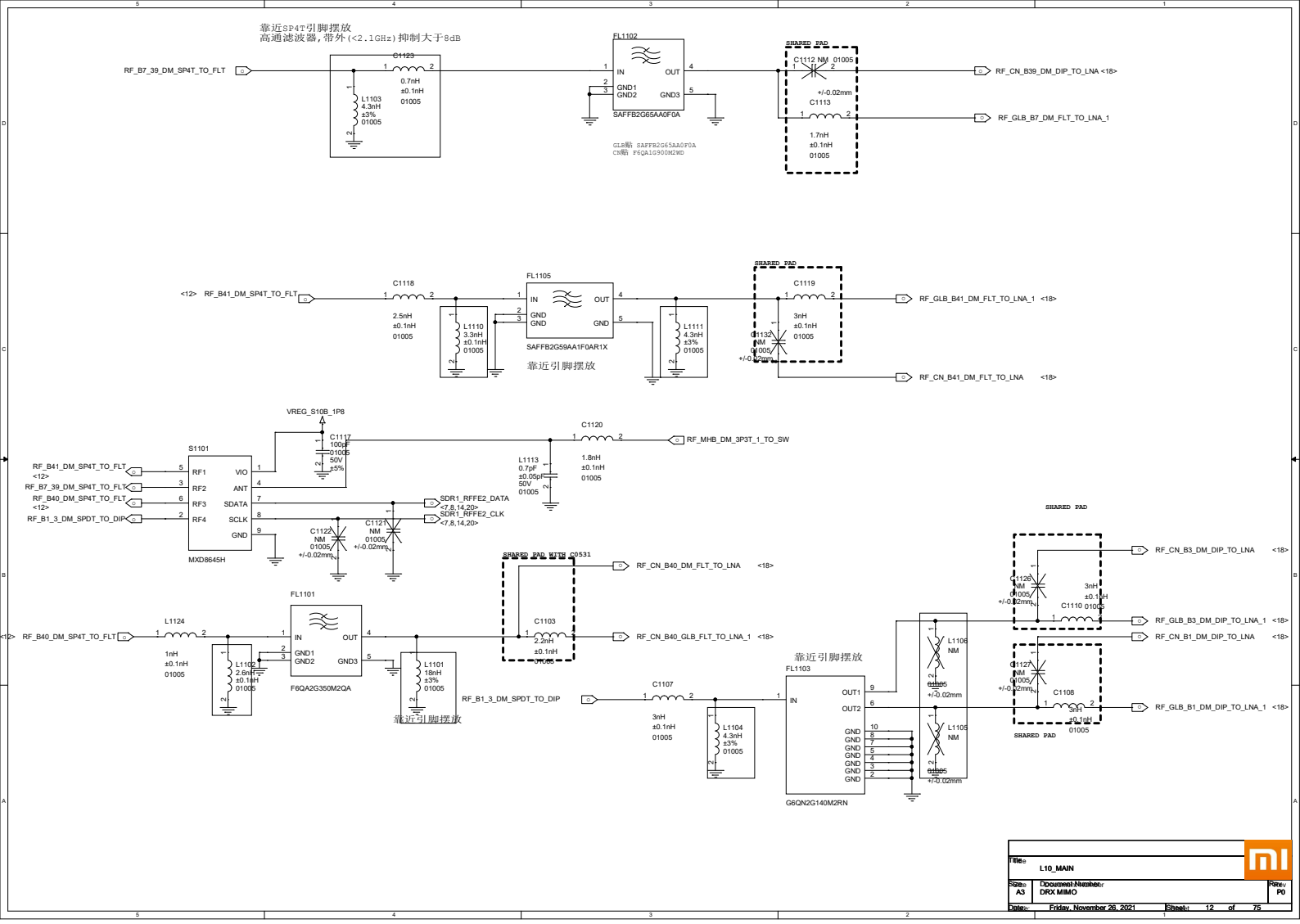
靠近SP4T引脚摆放
高通滤波器,带外(<2.1GHz)抑制大于8dB
RF_B7_39_DM_SP4T_TO_FLT
C1123
0.7nH
±0.1nH
01005
L1103
4.3nH
±3%
01005
FL1102
IN
OUT
GND1
GND2
GND3
SAFFB2G65AA0F0A
GLB贴 SAFFB2G65AA0F0A
CN贴 F6QA1G900M2WD
SHARED PAD
C1112 NM 01005
+/-0.02mm
C1113
1.7nH
±0.1nH
01005
RF_CN_B39_DM_DIP_TO_LNA <18>
RF_GLB_B7_DM_FLT_TO_LNA_1
<12> RF_B41_DM_SP4T_TO_FLT
C1118
2.5nH
±0.1nH
01005
L1110
3.3nH
±0.1nH
01005
FL1105
IN
OUT
GND
GND
SAFFB2G59AA1F0AR1X
靠近引脚摆放
L1111
4.3nH
±3%
01005
C1119
3nH
±0.1nH
01005
C1132
NM
01005
+/-0.02mm
RF_GLB_B41_DM_FLT_TO_LNA_1 <18>
RF_CN_B41_DM_FLT_TO_LNA <18>
VREG_S10B_1P8
C1117
100pF
01005
50V
±5%
S1101
RF1
RF2
RF3
RF4
VIO
ANT
SDATA
SCLK
GND
MXD8645H
RF_B41_DM_SP4T_TO_FLT
<12>
RF_B7_39_DM_SP4T_TO_FLT
RF_B40_DM_SP4T_TO_FLT
<12>
RF_B1_3_DM_SPDT_TO_DIP
C1122
NM
01005
+/-0.02mm
C1121
NM
01005
+/-0.02mm
SDR1_RFFE2_DATA
<7,8,14,20>
SDR1_RFFE2_CLK
<7,8,14,20>
C1120
1.8nH
±0.1nH
01005
L1113
0.7pF
±0.05pF
50V
01005
RF_MHB_DM_3P3T_1_TO_SW
SHARED PAD WITH C0531
RF_CN_B40_DM_FLT_TO_LNA <18>
C1103
2.2nH
±0.1nH
01005
RF_CN_B40_GLB_FLT_TO_LNA_1 <18>
<12> RF_B40_DM_SP4T_TO_FLT
L1124
1nH
±0.1nH
01005
L1102
2.6nH
±0.1nH
01005
FL1101
IN
OUT
GND1
GND2
GND3
F6QA2G350M2QA
L1101
18nH
±3%
01005
靠近引脚摆放
RF_B1_3_DM_SPDT_TO_DIP
C1107
3nH
±0.1nH
01005
L1104
4.3nH
±3%
01005
靠近引脚摆放
FL1103
IN
OUT1
OUT2
GND
GND
GND
GND
GND
GND
GND
G6QN2G140M2RN
L1106
NM
01005
+/-0.02mm
L1105
NM
01005
+/-0.02mm
SHARED PAD
C1126
NM
01005
+/-0.02mm
3nH
±0.1nH
C1110 01005
RF_CN_B3_DM_DIP_TO_LNA <18>
RF_GLB_B3_DM_DIP_TO_LNA_1 <18>
RF_CN_B1_DM_DIP_TO_LNA <18>
C1127
NM
01005
+/-0.02mm
C1108
3nH
±0.1nH
01005
RF_GLB_B1_DM_DIP_TO_LNA_1 <18>
SHARED PAD
Title
L10_MAIN
Size
A3
Document Number
DRX MIMO
Rev
P0
Date:
Friday, November 26, 2021
Sheet
12
of
75

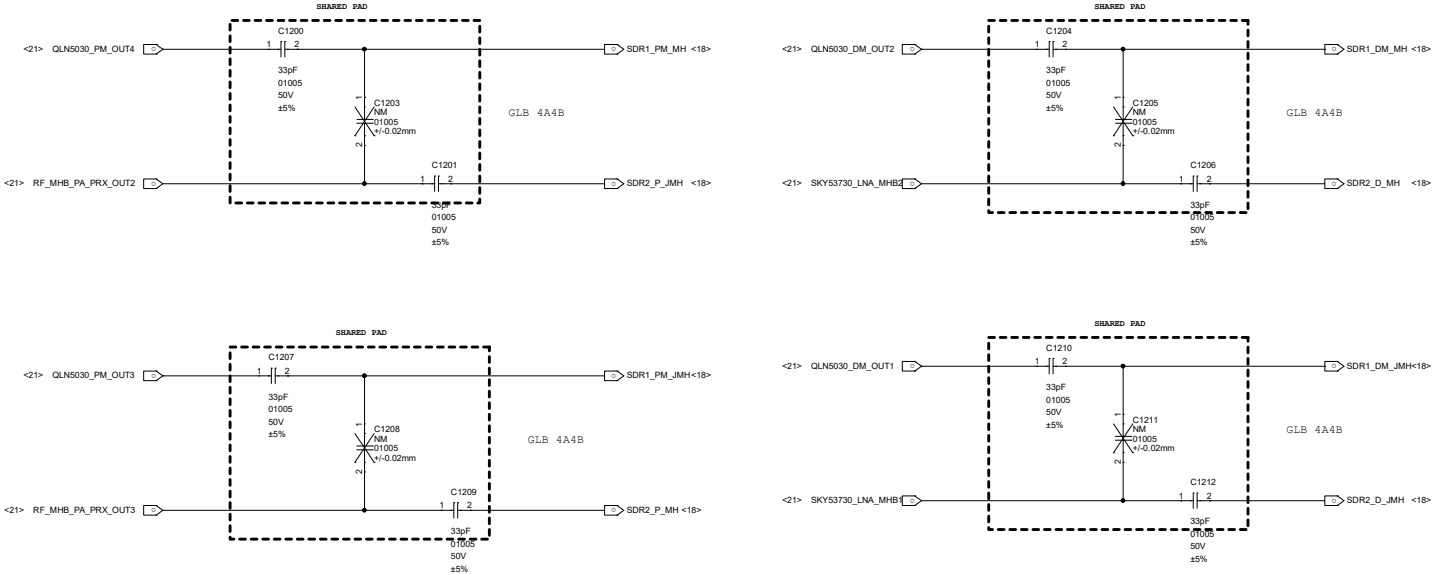

Title:	L10_MAIN	
Size: A3	Document Number: Reserved(for LNA)	Rev: P0
Date: Friday, November 26, 2021	Sheet 13 of 75	

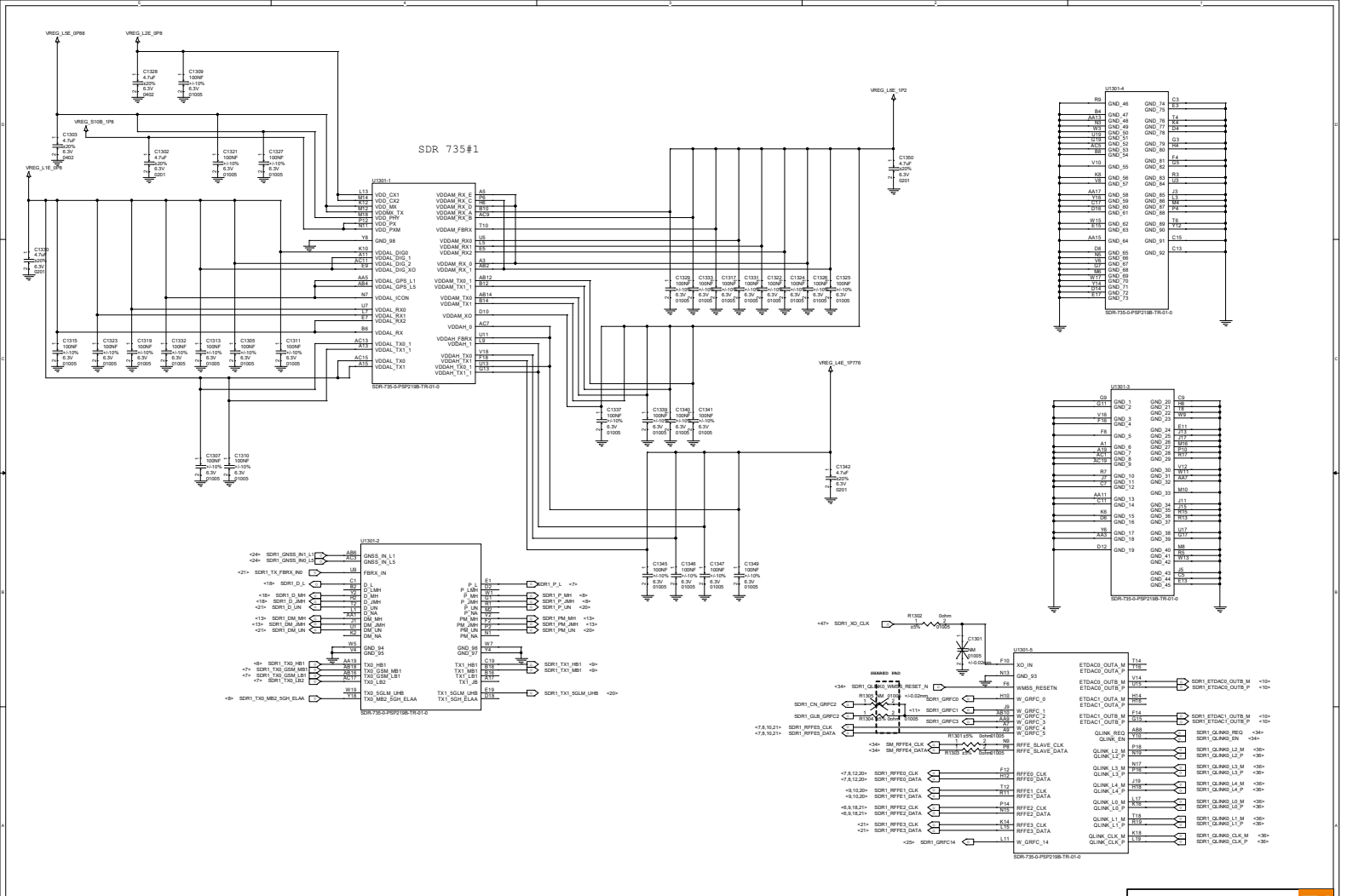
SDR 735#1
U1301-1
SDR-735-0-PSP219B-TR-01-0
U1301-2
SDR-735-0-PSP219B-TR-01-0
U1301-3
SDR-735-0-PSP219B-TR-01-0
U1301-4
SDR-735-0-PSP219B-TR-01-0
U1301-5
SDR-735-0-PSP219B-TR-01-0
VREG_L5E_0P95
VREG_L2E_0P6
VREG_S10B_1P8
VREG_L1E_0P6
VREG_L6E_1P2
VREG_L4E_1P776
SEARED PAD
L10_MAIN
Wednesday, November 26, 2021
Sheet 14 of 75

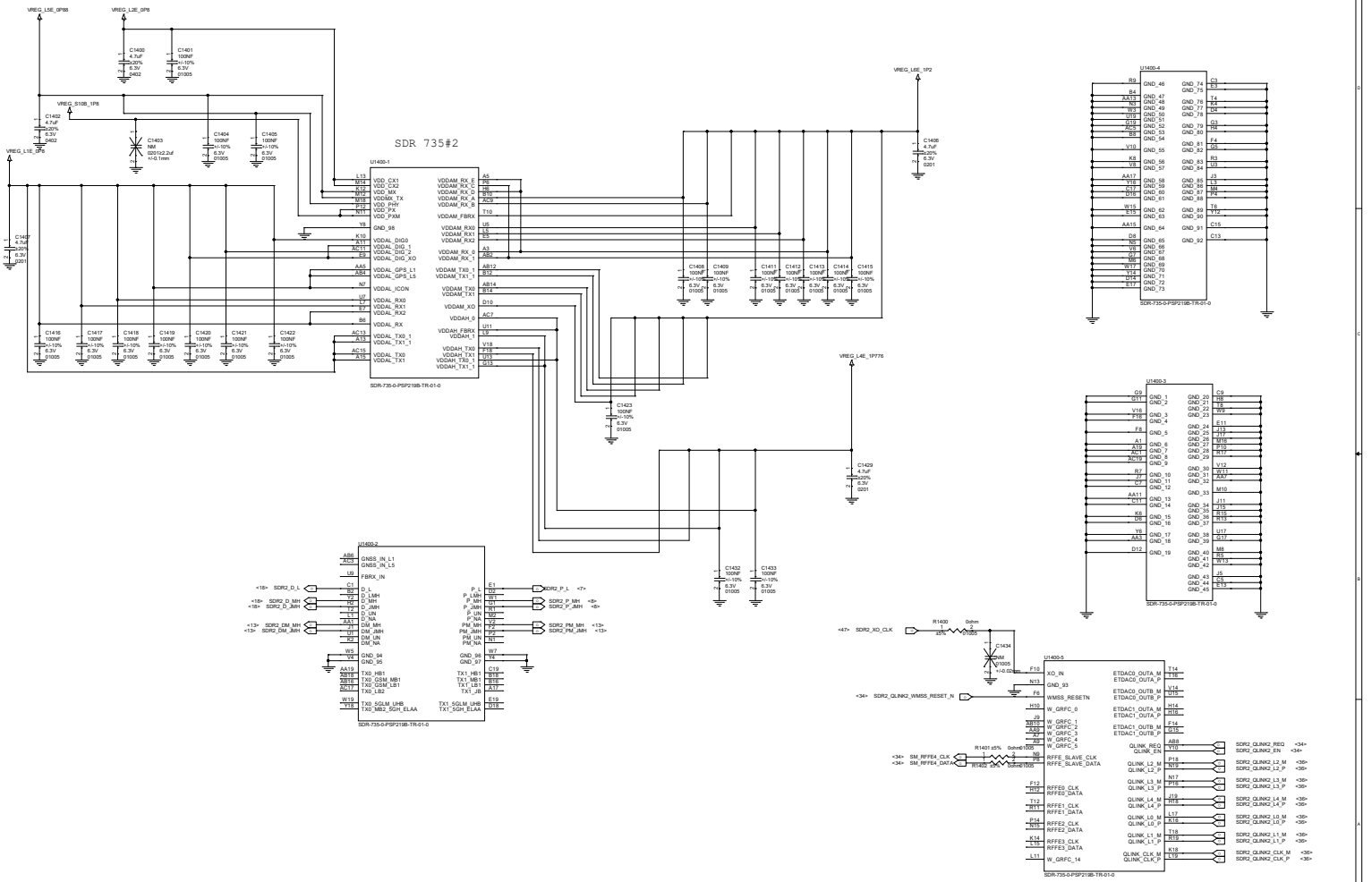
SDR 735#2
U1400-1
SDR-735-0-PSP219B-TR-01-0
U1400-2
SDR-735-0-PSP219B-TR-01-0
U1400-3
SDR-735-0-PSP219B-TR-01-0
U1400-4
SDR-735-0-PSP219B-TR-01-0
U1400-5
SDR-735-0-PSP219B-TR-01-0
VREG_L5E_0P88
VREG_L2E_0P6
VREG_S1B_1P6
VREG_L1E_0P6
VREG_L6E_1P2
VREG_L4E_1P776
C1400 4.7uF ±20% 6.3V 0402
C1401 100NF +/-10% 6.3V 01005
C1402 4.7uF ±20% 6.3V 0402
C1403 NM 0201(2.2uf +/-0.1mm
C1404 100NF +/-10% 6.3V 01005
C1405 100NF +/-10% 6.3V 01005
C1406 4.7uF ±20% 6.3V 0201
C1407 4.7uF ±20% 6.3V 0201
C1408 100NF +/-10% 6.3V 01005
C1409 100NF +/-10% 6.3V 01005
C1411 100NF +/-10% 6.3V 01005
C1412 100NF +/-10% 6.3V 01005
C1413 100NF +/-10% 6.3V 01005
C1414 100NF +/-10% 6.3V 01005
C1415 100NF +/-10% 6.3V 01005
C1416 100NF +/-10% 6.3V 01005
C1417 100NF +/-10% 6.3V 01005
C1418 100NF +/-10% 6.3V 01005
C1419 100NF +/-10% 6.3V 01005
C1420 100NF +/-10% 6.3V 01005
C1421 100NF +/-10% 6.3V 01005
C1422 100NF +/-10% 6.3V 01005
C1423 100NF +/-10% 6.3V 01005
C1429 4.7uF ±20% 6.3V 0201
C1432 100NF +/-10% 6.3V 01005
C1433 100NF +/-10% 6.3V 01005
C1434 NM 01005 +/-0.05mm
R1400 0ohm ±5% 01005
R1401 ±5% 0ohm±1005
R1402 NM 0ohm±1005
VDD_CX1
VDD_CX2
VDD_MX
VDDMX_TX
VDD_PRY
VDD_PX
VDD_PXM
GND_98
VDDAL_DIG0
VDDAL_DIG_1
VDDAL_DIG_2
VDDAL_DIG_XO
VDDAL_GPS_L1
VDDAL_GPS_L5
VDDAL_ICON
VDDAL_RX0
VDDAL_RX1
VDDAL_RX2
VDDAL_RX
VDDAL_TX0_1
VDDAL_TX1_1
VDDAL_TX0
VDDAL_TX1
VDDAM_RX_E
VDDAM_RX_C
VDDAM_RX_D
VDDAM_RX_A
VDDAM_RX_B
VDDAM_FBRX
VDDAM_RX0
VDDAM_RX1
VDDAM_RX2
VDDAM_RX_0
VDDAM_RX_1
VDDAM_TX0_1
VDDAM_TX1_1
VDDAM_TX0
VDDAM_TX1
VDDAM_XO
VDDAH_0
VDDAH_FBRX
VDDAH_1
VDDAH_TX0
VDDAH_TX1
VDDAH_TX0_1
VDDAH_TX1_1
GNSS_IN_L1
GNSS_IN_L5
FBRX_IN
D_L
D_LMH
D_MH
D_JMH
D_UN
D_NA
DM_MH
DM_JMH
DM_UN
DM_NA
GND_94
GND_95
TX0_HB1
TX0_GSM_MB1
TX0_GSM_LB1
TX0_LB2
TX0_5GLM_UHB
TX0_MB2_5GH_ELAA
P_L
P_LMH
P_MH
P_JMH
P_UN
P_NA
PM_MH
PM_JMH
PM_UN
PM_NA
GND_96
GND_97
TX1_HB1
TX1_MB1
TX1_LB1
TX1_JB
TX1_5GLM_UHB
TX1_5GH_ELAA
<18> SDR2_D_L
<18> SDR2_D_MH
<18> SDR2_D_JMH
<13> SDR2_DM_MH
<13> SDR2_DM_JMH
SDR2_P_L <7>
SDR2_P_MH <8>
SDR2_P_JMH <8>
SDR2_PM_MH <13>
SDR2_PM_JMH <13>
<47> SDR2_XO_CLK
<34> SDR2_QLINK2_WMSS_RESET_N
<34> SM_RFFE4_CLK
<34> SM_RFFE4_DATA
XO_IN
GND_93
WMSS_RESETN
W_GRFC_0
W_GRFC_1
W_GRFC_2
W_GRFC_3
W_GRFC_4
W_GRFC_5
RFFE_SLAVE_CLK
RFFE_SLAVE_DATA
RFFE3_CLK
RFFE3_DATA
RFFE1_CLK
RFFE1_DATA
RFFE2_CLK
RFFE2_DATA
RFFE3_CLK
RFFE3_DATA
W_GRFC_14
ETDAC0_OUTA_M
ETDAC0_OUTA_P
ETDAC0_OUTB_M
ETDAC0_OUTB_P
ETDAC1_OUTA_M
ETDAC1_OUTA_P
ETDAC1_OUTB_M
ETDAC1_OUTB_P
QLINK_REQ
QLINK_EN
QLINK_L2_M
QLINK_L2_P
QLINK_L3_M
QLINK_L3_P
QLINK_L4_M
QLINK_L4_P
QLINK_L0_M
QLINK_L0_P
QLINK_L1_M
QLINK_L1_P
QLINK_CLK_M
QLINK_CLK_P
SDR2_QLINK2_REQ <34>
SDR2_QLINK2_EN <34>
SDR2_QLINK2_L2_M <35>
SDR2_QLINK2_L2_P <35>
SDR2_QLINK2_L3_M <35>
SDR2_QLINK2_L3_P <35>
SDR2_QLINK2_L4_M <35>
SDR2_QLINK2_L4_P <35>
SDR2_QLINK2_L0_M <35>
SDR2_QLINK2_L0_P <35>
SDR2_QLINK2_L1_M <35>
SDR2_QLINK2_L1_P <35>
SDR2_QLINK2_CLK_M <35>
SDR2_QLINK2_CLK_P <35>
L10_MAIN
A2
WTR 8(MF)S-2
PQ
Friday, November 26, 2021
Sheet 18 of 25

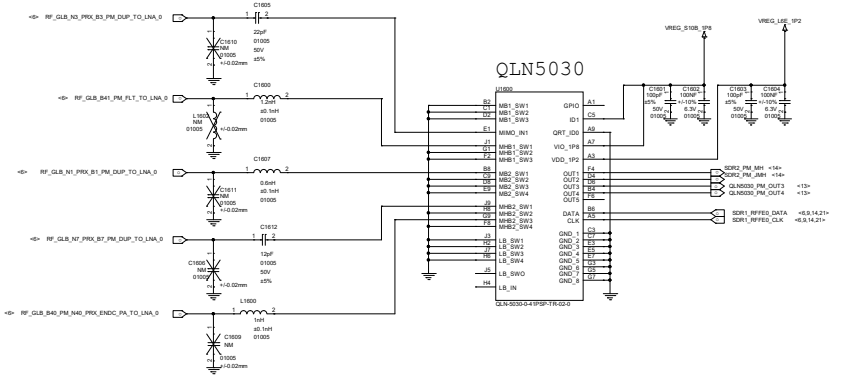

Title	L10_MAIN		
Size	Document Number		Rev
A2	Reserved(for 5G-sub 6G)		R0
Date:	Friday, November 26, 2021	Sheet 17 of 75	

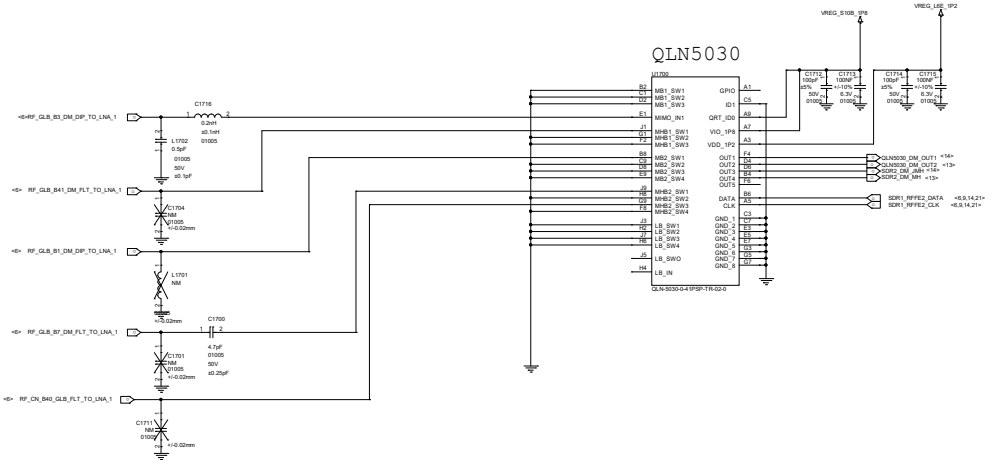

Title	L10_NANM		
Size	Document Number		Rev
A2	Reserved(for MM Wave)		P0
Date:	Friday, November 26, 2021	Sheet 16 of 75	

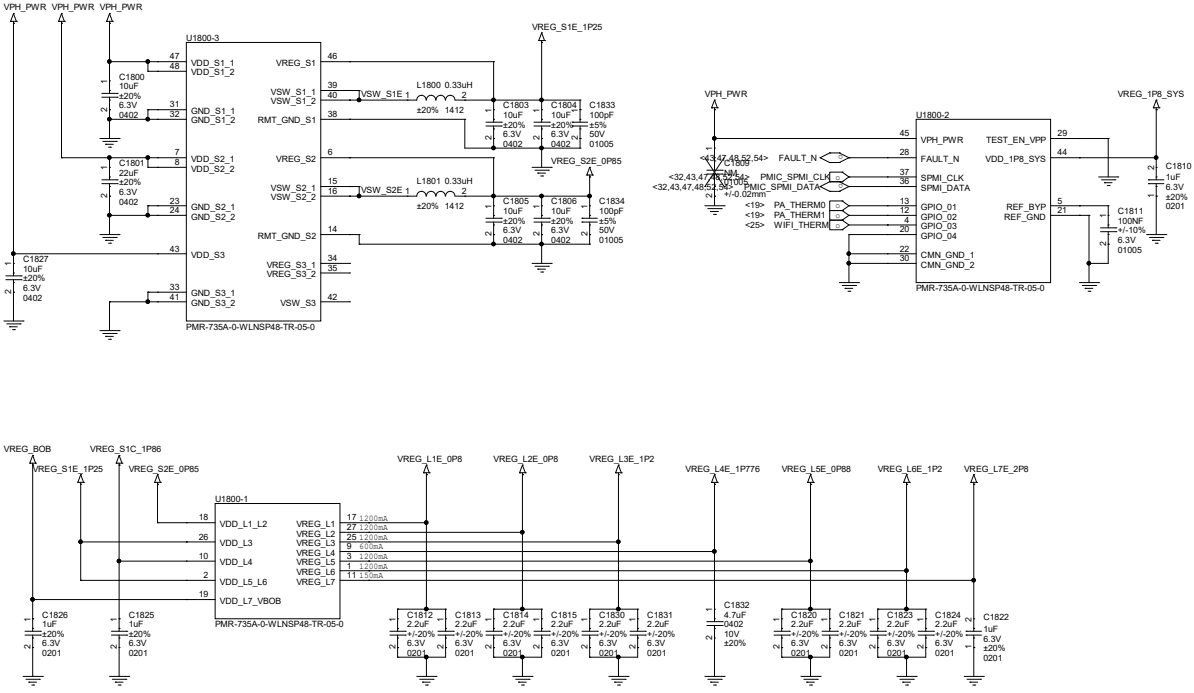

Title	L10_MAIN	
Size A3	Document Number PMR735A/PMR735B	Rev P0
Date: Friday, November 26, 2021	Sheet 19 of 75	

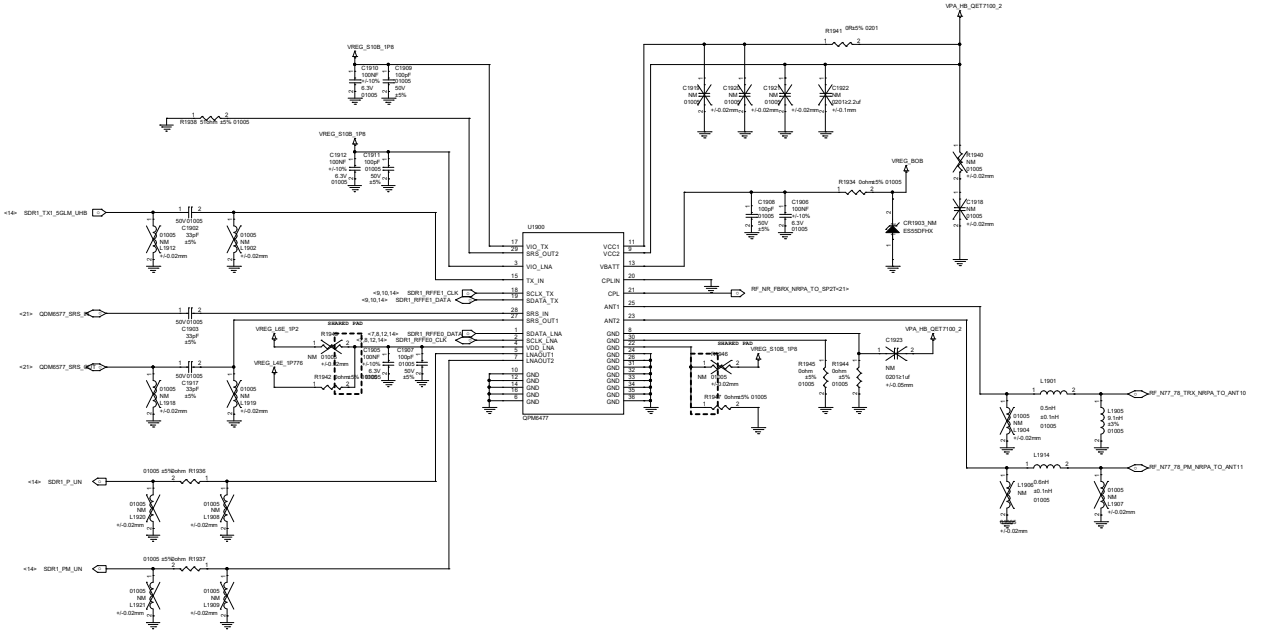

Title	L10_MAIN
Size	A2
Document Number	5G N77 N79
Rev	P0
Date:	Friday, November 26, 2021
Sheet	20 of 79

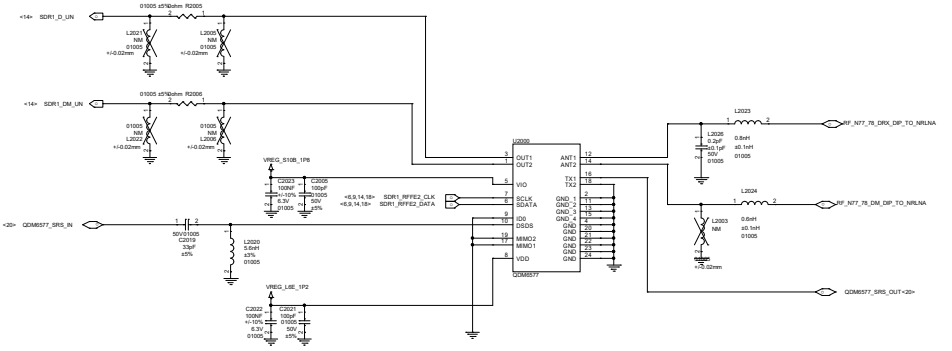

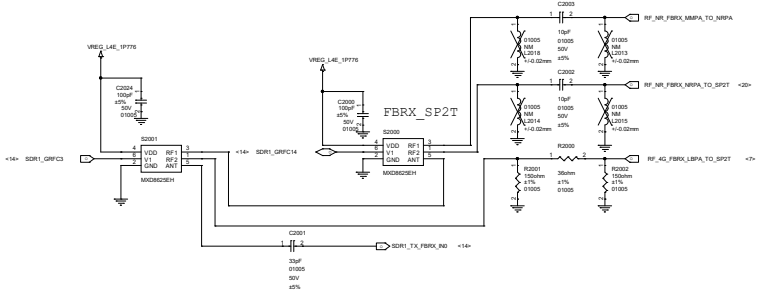

Title	L10_MAIN		
Size: A2	Document Number: 5G N77 N78 MIMO		Rev: P0
Date: Friday, November 26, 2021	Sheet 21 of 75		

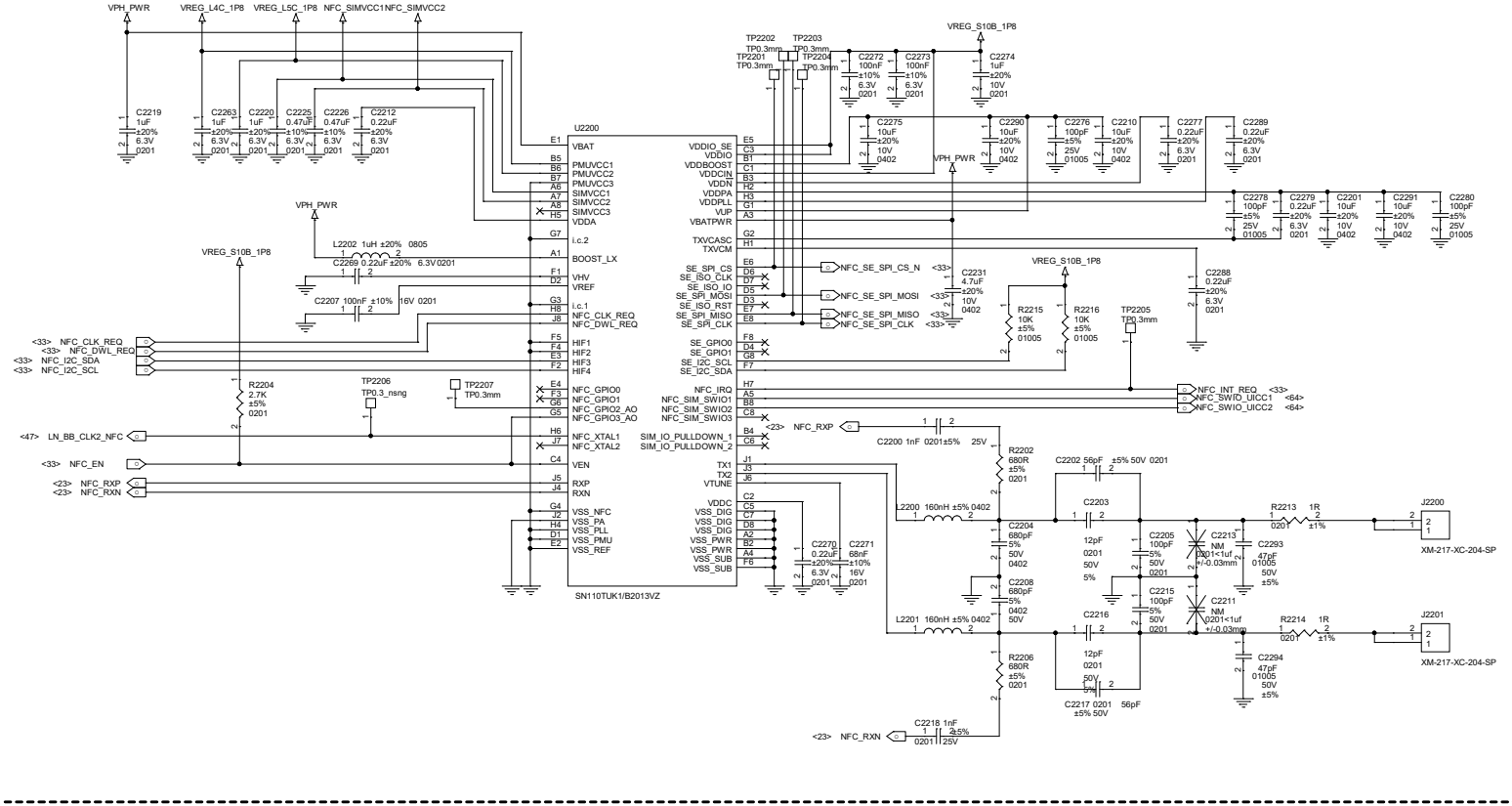

Title	L10_MAIN		
Size A3	Document Number NFC		Rev P0
Date: Friday, November 26, 2021	Sheet 23 of 75		

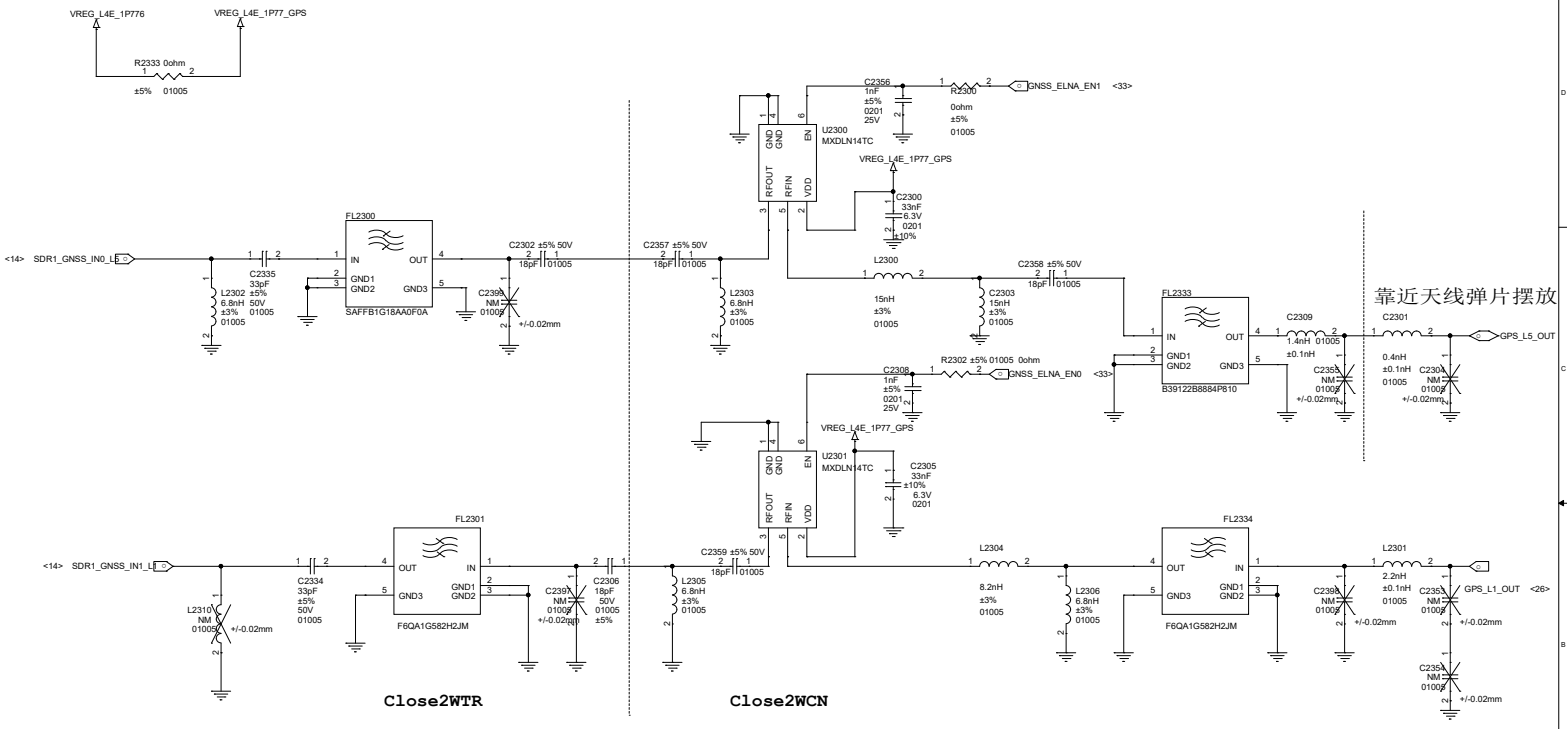

靠近天线弹片摆放

Title	L10_MAIN	
Size A3	Document Number GPS	Rev P0
Date: Friday, November 26, 2021	Sheet 24 of 75	

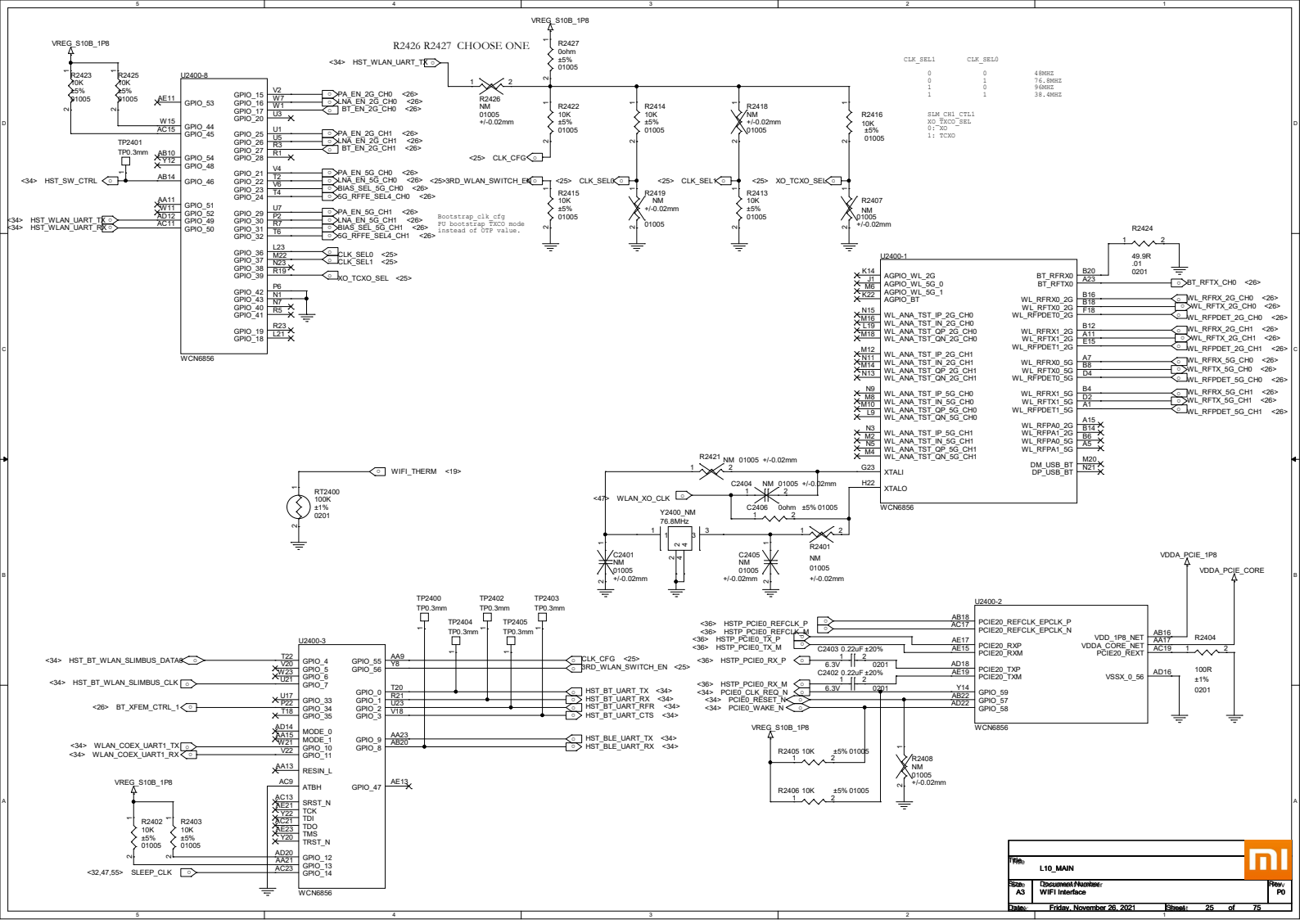
R2426 R2427 CHOOSE ONE
VREG_S10B_1P8
R2423 10K ±5% 01005
R2425 10K ±5% 01005
U2400-8
GPIO_53
GPIO_44
GPIO_45
GPIO_54
GPIO_48
GPIO_46
GPIO_51
GPIO_52
GPIO_49
GPIO_50
WCN6856
TP2401 TP0.3mm
HST_SW_CTRL
HST_WLAN_UART_TX
HST_WLAN_UART_RX
HST_WLAN_UART_TK
R2427 0ohm ±5% 01005
R2426 NM 01005 +/-0.02mm
R2422 10K ±5% 01005
R2414 10K ±5% 01005
R2418 NM +/-0.02mm 01005
R2416 10K ±5% 01005
R2415 10K ±5% 01005
R2419 NM +/-0.02mm 01005
R2413 10K ±5% 01005
R2407 NM 01005 +/-0.02mm
CLK_CFG
CLK_SEL0
CLK_SEL
XO_TCXO_SEL
3RD_WLAN_SWITCH_EN
PA_EN_2G_CH0
LNA_EN_2G_CH0
BT_EN_2G_CH0
PA_EN_2G_CH1
LNA_EN_2G_CH1
BT_EN_2G_CH1
PA_EN_5G_CH0
LNA_EN_5G_CH0
BIAS_SEL_5G_CH0
5G_RFFE_SEL4_CH0
PA_EN_5G_CH1
LNA_EN_5G_CH1
BIAS_SEL_5G_CH1
5G_RFFE_SEL4_CH1
CLK_SEL0
CLK_SEL1
XO_TCXO_SEL
Bootstrap_clk_cfg
PU bootstrap TXCO mode
instead of OTP value.
CLK_SEL1 CLK_SEL0
0 0 48MHZ
0 1 76.8MHZ
1 0 96MHZ
1 1 38.4MHZ
SLM_CH1_CTL1
XO_TXCO_SEL
0:XO
1: TCXO
R2424 49.9R .01 0201
U2400-1
AGPIO_WL_2G
AGPIO_WL_5G_0
AGPIO_WL_5G_1
AGPIO_BT
WL_ANA_TST_IP_2G_CH0
WL_ANA_TST_IN_2G_CH0
WL_ANA_TST_QP_2G_CH0
WL_ANA_TST_QN_2G_CH0
WL_ANA_TST_IP_2G_CH1
WL_ANA_TST_IN_2G_CH1
WL_ANA_TST_QP_2G_CH1
WL_ANA_TST_QN_2G_CH1
WL_ANA_TST_IP_5G_CH0
WL_ANA_TST_IN_5G_CH0
WL_ANA_TST_QP_5G_CH0
WL_ANA_TST_QN_5G_CH0
WL_ANA_TST_IP_5G_CH1
WL_ANA_TST_IN_5G_CH1
WL_ANA_TST_QP_5G_CH1
WL_ANA_TST_QN_5G_CH1
XTALI
XTALO
WCN6856
BT_RFRX0
BT_RFTX0
BT_RFTX_CH0
WL_RFRX0_2G
WL_RFTX0_2G
WL_RFPDET0_2G
WL_RFRX_2G_CH0
WL_RFTX_2G_CH0
WL_RFPDET_2G_CH0
WL_RFRX1_2G
WL_RFTX1_2G
WL_RFPDET1_2G
WL_RFRX_2G_CH1
WL_RFTX_2G_CH1
WL_RFPDET_2G_CH1
WL_RFRX0_5G
WL_RFTX0_5G
WL_RFPDET0_5G
WL_RFRX_5G_CH0
WL_RFTX_5G_CH0
WL_RFPDET_5G_CH0
WL_RFRX1_5G
WL_RFTX1_5G
WL_RFPDET1_5G
WL_RFRX_5G_CH1
WL_RFTX_5G_CH1
WL_RFPDET_5G_CH1
WL_RFPA0_2G
WL_RFPA1_2G
WL_RFPA0_5G
WL_RFPA1_5G
DM_USB_BT
DP_USB_BT
WIFI_THERM
RT2400 100K ±1% 0201
R2421 NM 01005 +/-0.02mm
C2404 NM 01005 +/-0.02mm
C2406 0ohm ±5% 01005
WLAN_XO_CLK
Y2400_NM 76.8MHz
C2401 NM 01005 +/-0.02mm
C2405 NM 01005 +/-0.02mm
R2401 NM 01005 +/-0.02mm
VDDA_PCIE_1P8
VDDA_PCIE_CORE
U2400-2
HSTP_PCIE0_REFCLK_P
HSTP_PCIE0_REFCLK_M
HSTP_PCIE0_TX_P
HSTP_PCIE0_TX_M
HSTP_PCIE0_RX_P
HSTP_PCIE0_RX_M
PCIE0_CLK_REQ_N
PCIE0_RESET_N
PCIE0_WAKE_N
PCIE20_REFCLK_EPCLK_P
PCIE20_REFCLK_EPCLK_N
PCIE20_RXP
PCIE20_RXM
PCIE20_TXP
PCIE20_TXM
GPIO_59
GPIO_57
GPIO_58
VDD_1P8_NET
VDDA_CORE_NET
PCIE20_REXT
VSSX_0_56
R2404 100R ±1% 0201
C2403 0.22uF ±20% 0201 6.3V
C2402 0.22uF ±20% 0201 6.3V
VREG_S10B_1P8
R2405 10K ±5% 01005
R2406 10K ±5% 01005
R2408 NM 01005 +/-0.02mm
TP2400 TP0.3mm
TP2404 TP0.3mm
TP2402 TP0.3mm
TP2405 TP0.3mm
TP2403 TP0.3mm
U2400-3
HST_BT_WLAN_SLIMBUS_DATA0
HST_BT_WLAN_SLIMBUS_CLK
BT_XFEM_CTRL_1
WLAN_COEX_UART1_TX
WLAN_COEX_UART1_RX
GPIO_4
GPIO_5
GPIO_6
GPIO_7
GPIO_33
GPIO_34
GPIO_35
MODE_0
MODE_1
GPIO_10
GPIO_11
RESIN_L
ATBH
SRST_N
TCK
TDI
TDO
TMS
TRST_N
GPIO_12
GPIO_13
GPIO_14
GPIO_55
GPIO_56
GPIO_0
GPIO_1
GPIO_2
GPIO_3
GPIO_9
GPIO_8
GPIO_47
CLK_CFG
3RD_WLAN_SWITCH_EN
HST_BT_UART_TX
HST_BT_UART_RX
HST_BT_UART_RFR
HST_BT_UART_CTS
HST_BLE_UART_TX
HST_BLE_UART_RX
WCN6856
VREG_S10B_1P8
R2402 10K ±5% 01005
R2403 10K ±5% 01005
SLEEP_CLK
File: L10_MAIN
Size: A3
Document Number: WIFI Interface
Rev: P0
Date: Friday, November 26, 2021
Sheet: 25 of 75

WIFI 5G CHAIN1

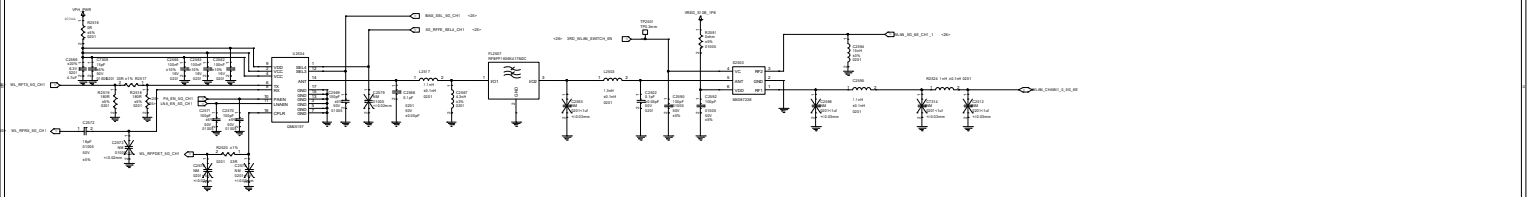

WIFI 5G CHAIN0

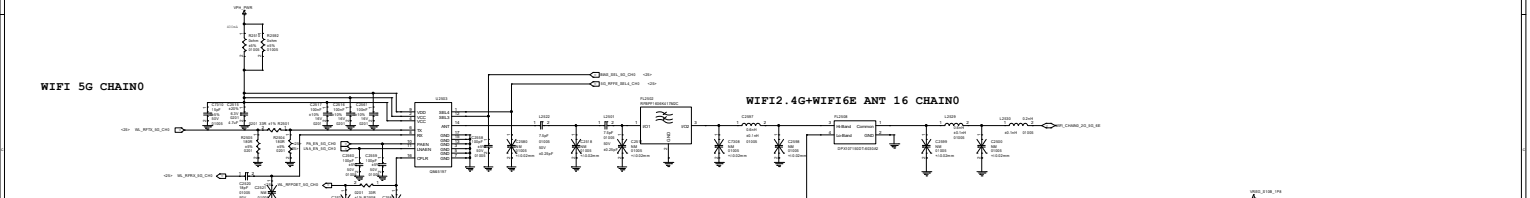

WIFI2.4G+WIFI6E ANT 16 CHAIN0

WIFI 2.4G CHAIN0

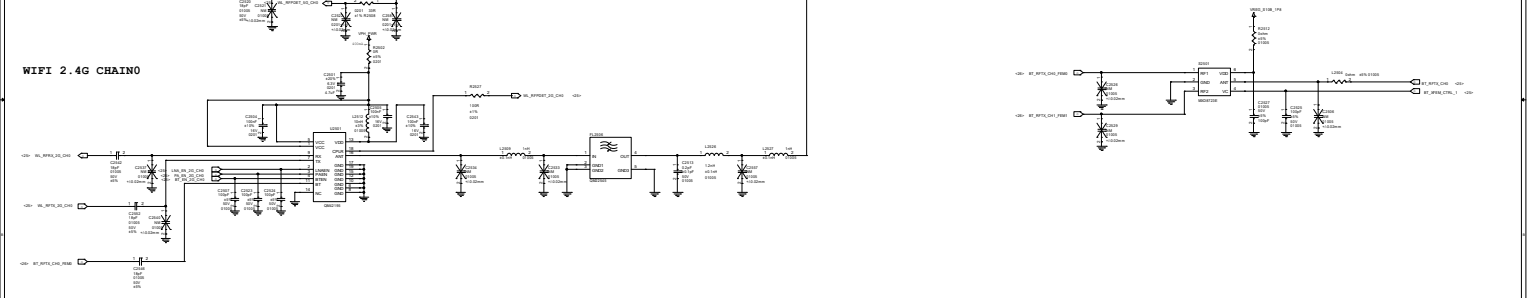

WIFI 2.4G CHAIN1

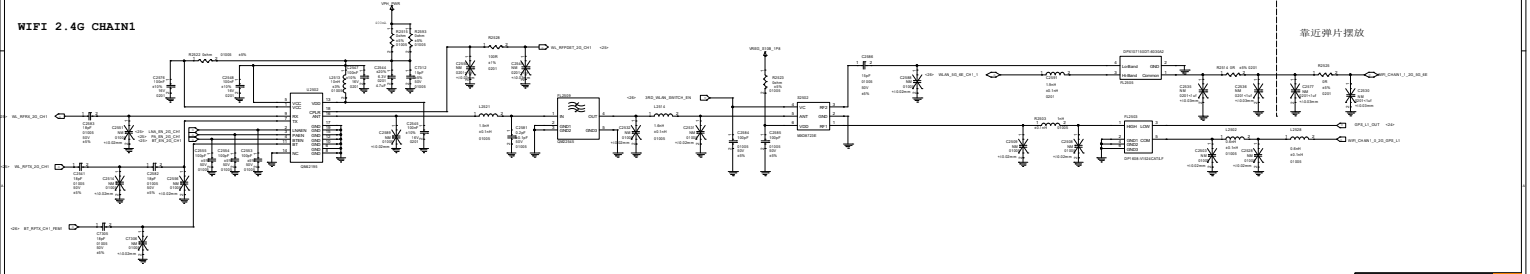

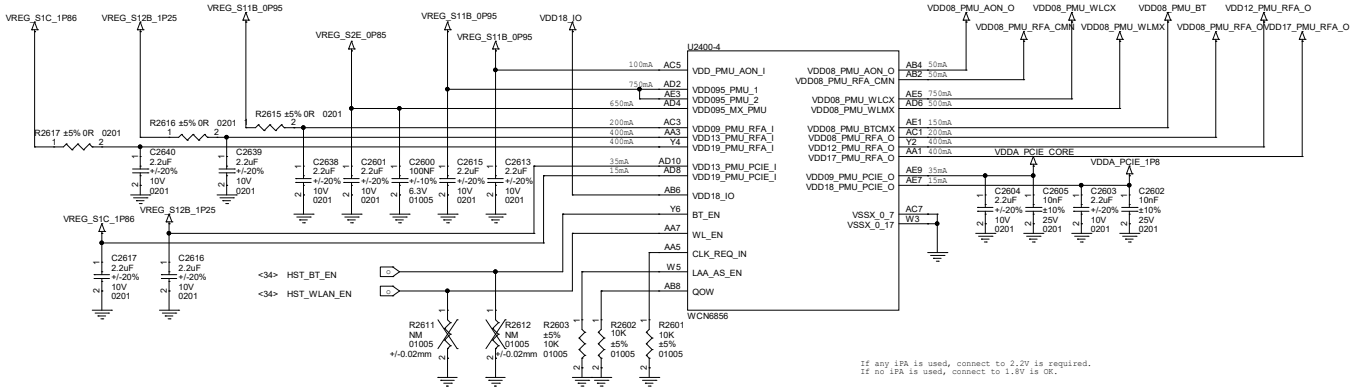

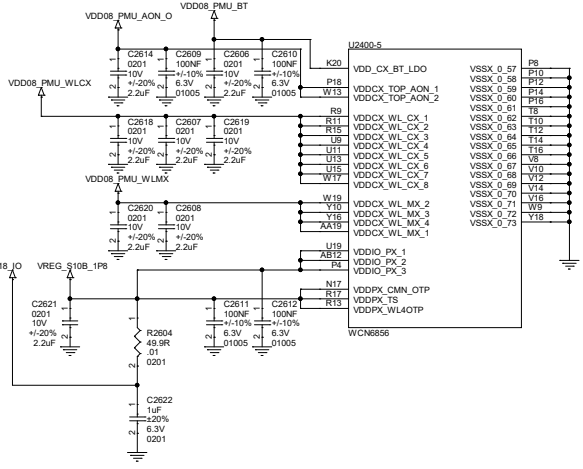

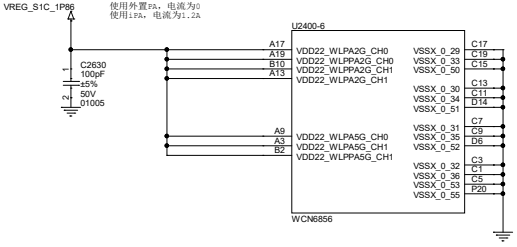

Title: L10_MAIN			
Size: A3	Document Number: WIFI Decoupling1		Rev: P0
Date: Friday, November 26, 2021		Sheet: 27 of 75	

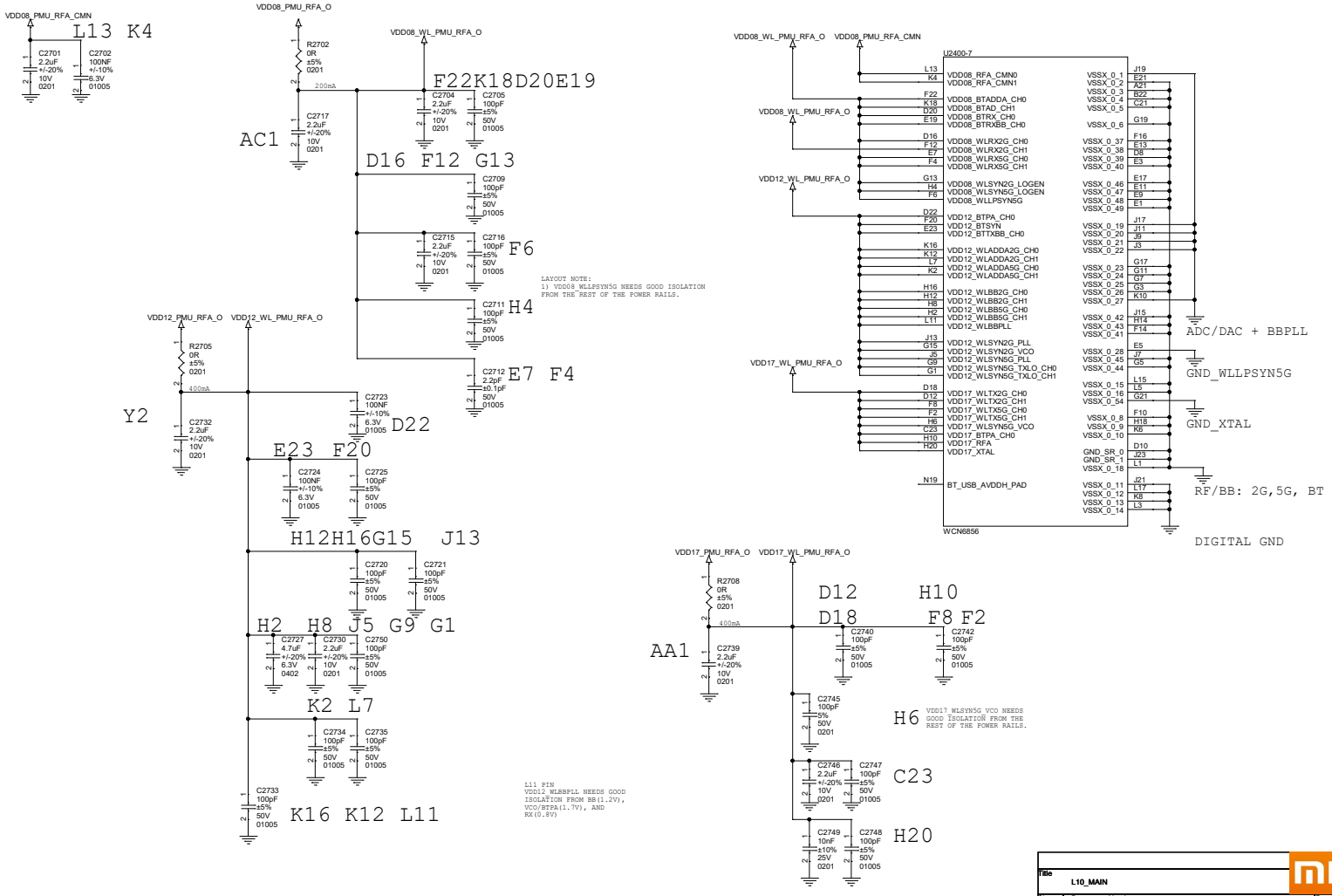

Title	L10_MAIN		
Size A3	Document Number WIFI Decouping2		Rev P0
Date: Friday, November 26, 2021		Sheet 28 of 75	

Place all ZQ resistors close to SM8350

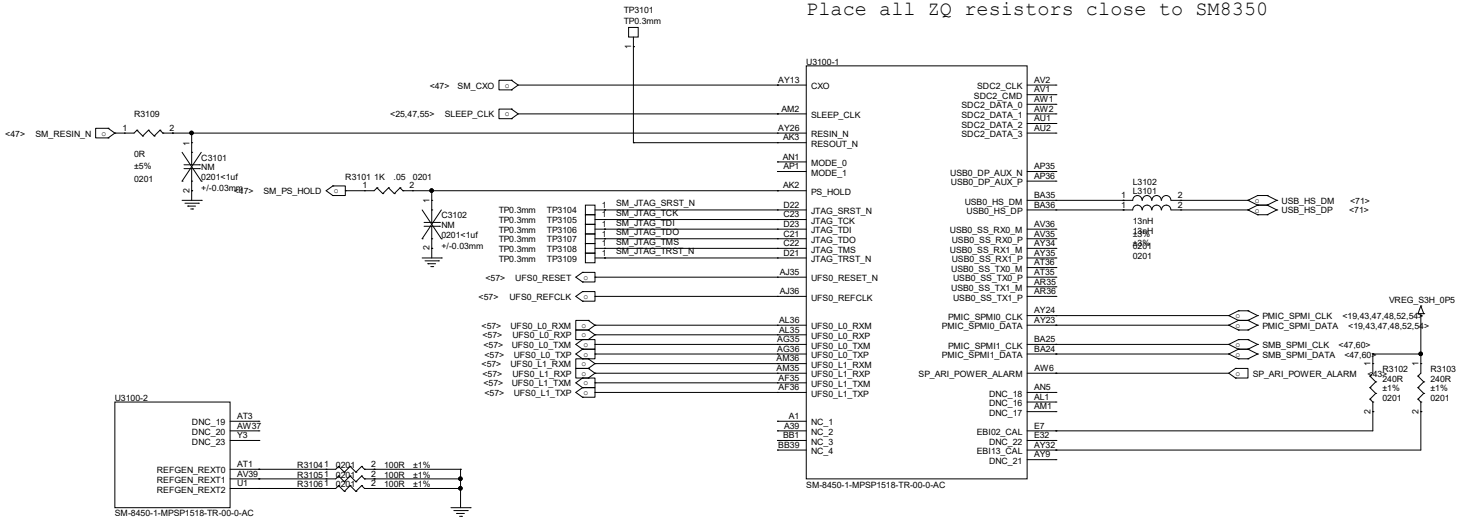

MSM skin temperature thermistor

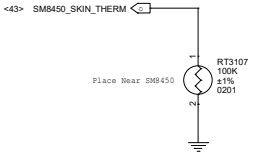

Quiet thermistor Place on a cool place

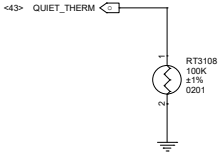

Title: L10_MAIN		
Size: A3	Document Number: SM8450 EVB	Rev: P0
Date: Friday, November 26, 2021	Sheet: 32 of 75	

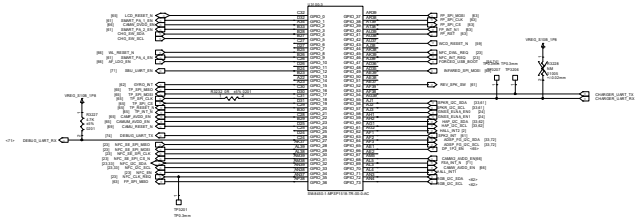
U8100
SM8450-1-MPSDP1G-TR-BGA-AC
LCD_RESET_N
BARRET_PA_1_EN
CAMAC_DVDD_EN
CAMAC_RESET_N
CCI_SDA_0
CCI_SCL_0
WL_RESET_N
BT_RESET_N
BT_PA_1_EN
BT_LDO_EN
BRU_UART_RX
CTRC1_ALT
TP_SPI_MOSI
TP_SPI_MISO
TP_SPI_CS
TP_RESET_N
TP_INT_N
LAMP_AVDD_EN
CAMAB_AVDD_EN
CAMAL_RESET_N
DEBUG_UART_TX
NFC_SE_SPI_MOSI
NFC_SE_SPI_MISO
NFC_SE_SPI_CS_N
NFC_SE_SPI_CLK_N
NFC_SE_IRQ
NFC_SE_RST
NFC_LCE_MOD
FT_SPI_MOSI
GPIO_0
GPIO_1
GPIO_2
GPIO_3
GPIO_4
GPIO_5
GPIO_6
GPIO_7
GPIO_8
GPIO_9
GPIO_10
GPIO_11
GPIO_12
GPIO_13
GPIO_14
GPIO_15
GPIO_16
GPIO_17
GPIO_18
GPIO_19
GPIO_20
GPIO_21
GPIO_22
GPIO_23
GPIO_24
GPIO_25
GPIO_26
GPIO_27
GPIO_28
GPIO_29
GPIO_30
GPIO_31
GPIO_32
GPIO_33
GPIO_34
GPIO_35
GPIO_36
GPIO_37
GPIO_38
GPIO_39

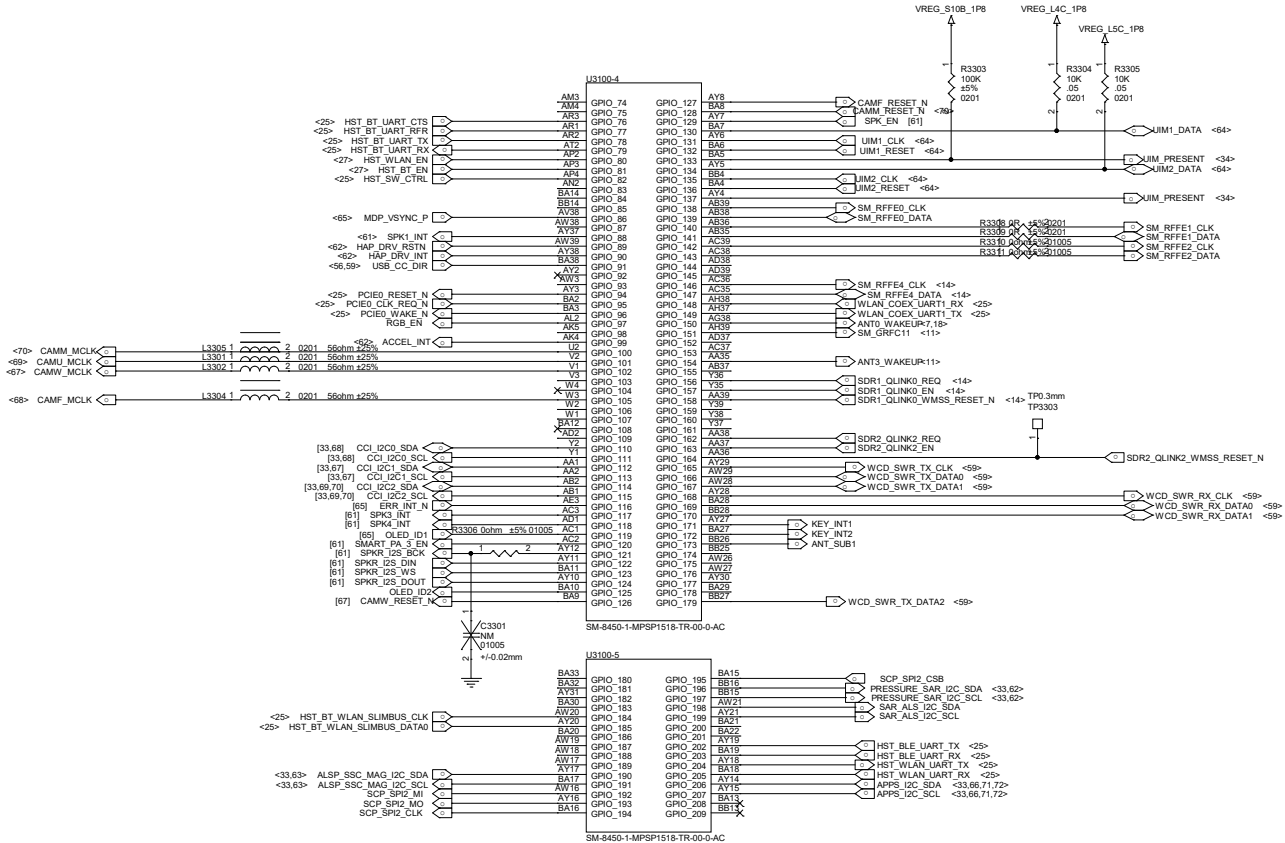

Title: L10_MAIN			
Size: A3	Document Number: SM8450 GPIO-2		Rev: P0
Date: Friday, November 26, 2021	Sheet: 34 of 75		

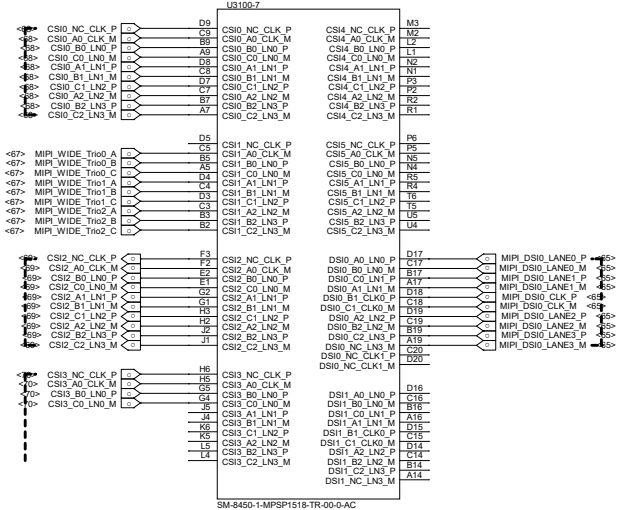

Title: L10_MAIN		
Size: A3	Document Number: SM8450 MIPI	Rev: P0
Date: Friday, November 26, 2021	Sheet: 35 of 75	

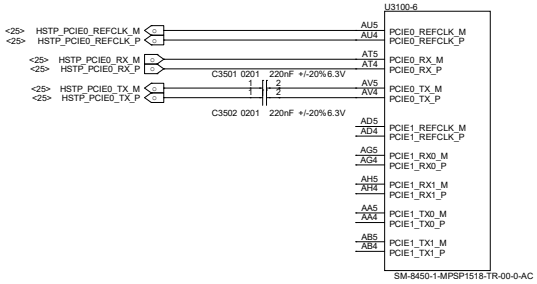

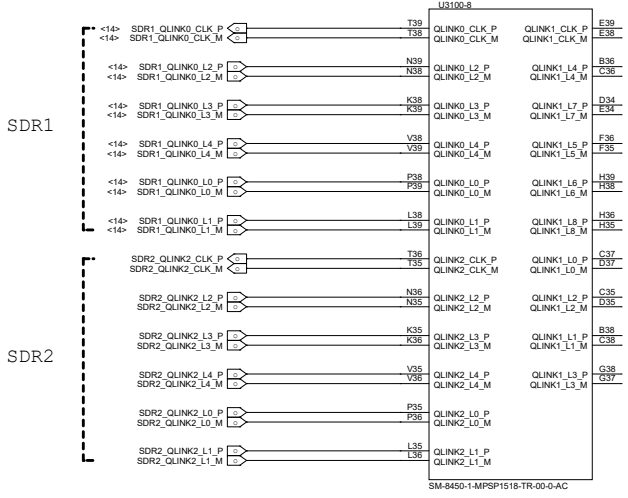

QLINK1 for mmW

Title: L10_MAIN			
Size: A3	Document Number: SM8450 RF MIPI		Rev: P0
Date: Friday, November 26, 2021	Sheet: 36 of 75		

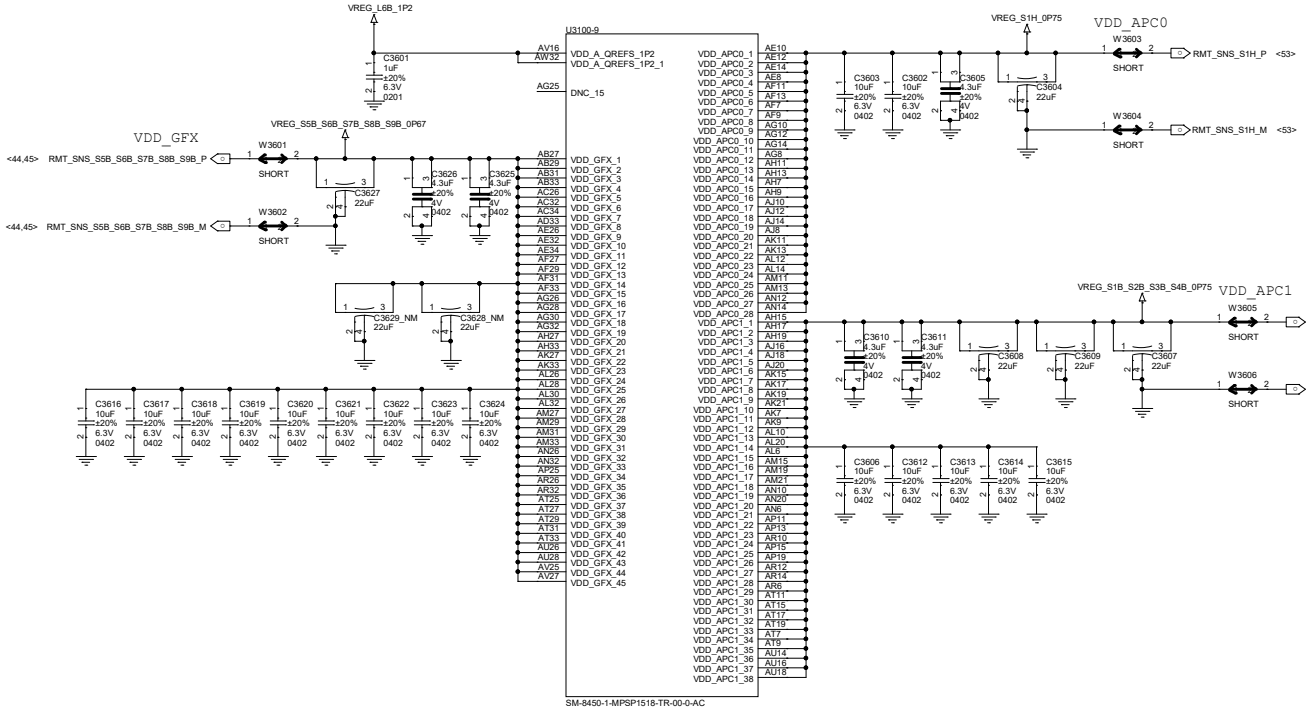

Title	L10_MAIN		
Size A3	Document Number SM8450 EVB		Rev P0
Date: Friday, November 26, 2021	Sheet 37 of 75		

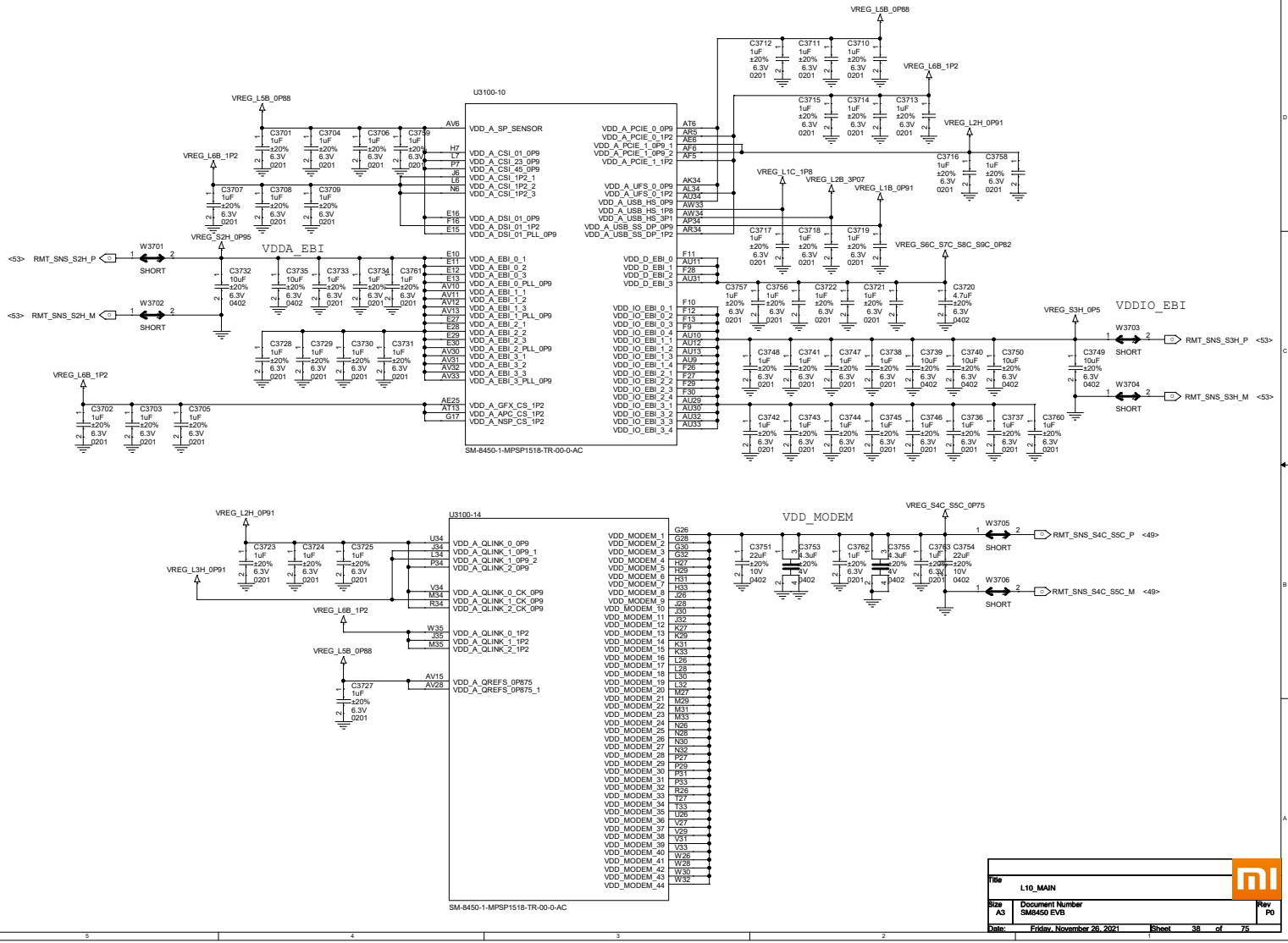

Title	L10_MAIN		
Size A3	Document Number SM8450 EVB		Rev P0
Date: Friday, November 26, 2021	Sheet 38 of 75		

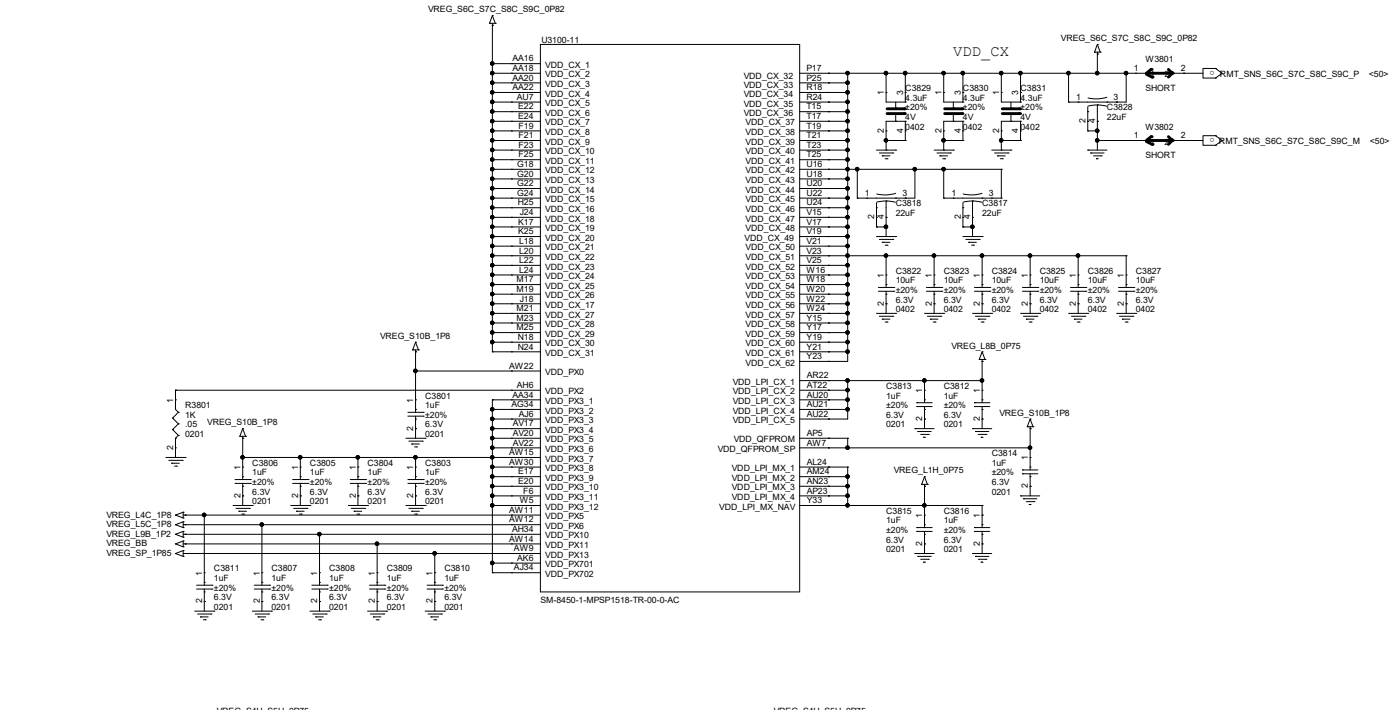

Title	L10_MAIN		
Size A3	Document Number SM8450 EVB		Rev P0
Date: Friday, November 26, 2021		Sheet 39 of 75	

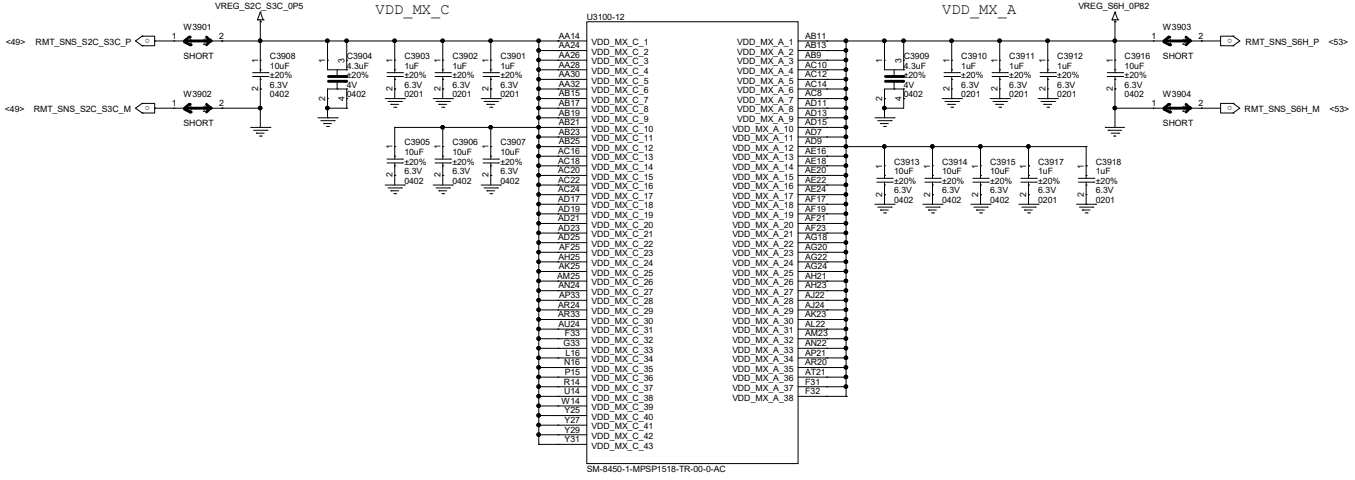

Title	L10_MAIN	
Size A3	Document Number SM8450 EVB	Rev P0
Date: Friday, November 26, 2021	Sheet 40 of 75	

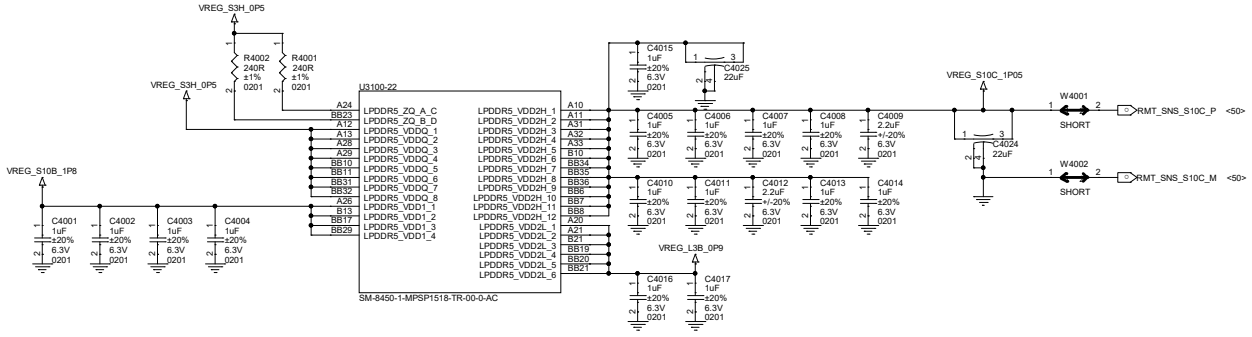

Title	L10_MAIN		
Size A3	Document Number SM8450 EVB		Rev P0
Date: Friday, November 26, 2021		Sheet 41 of 75	

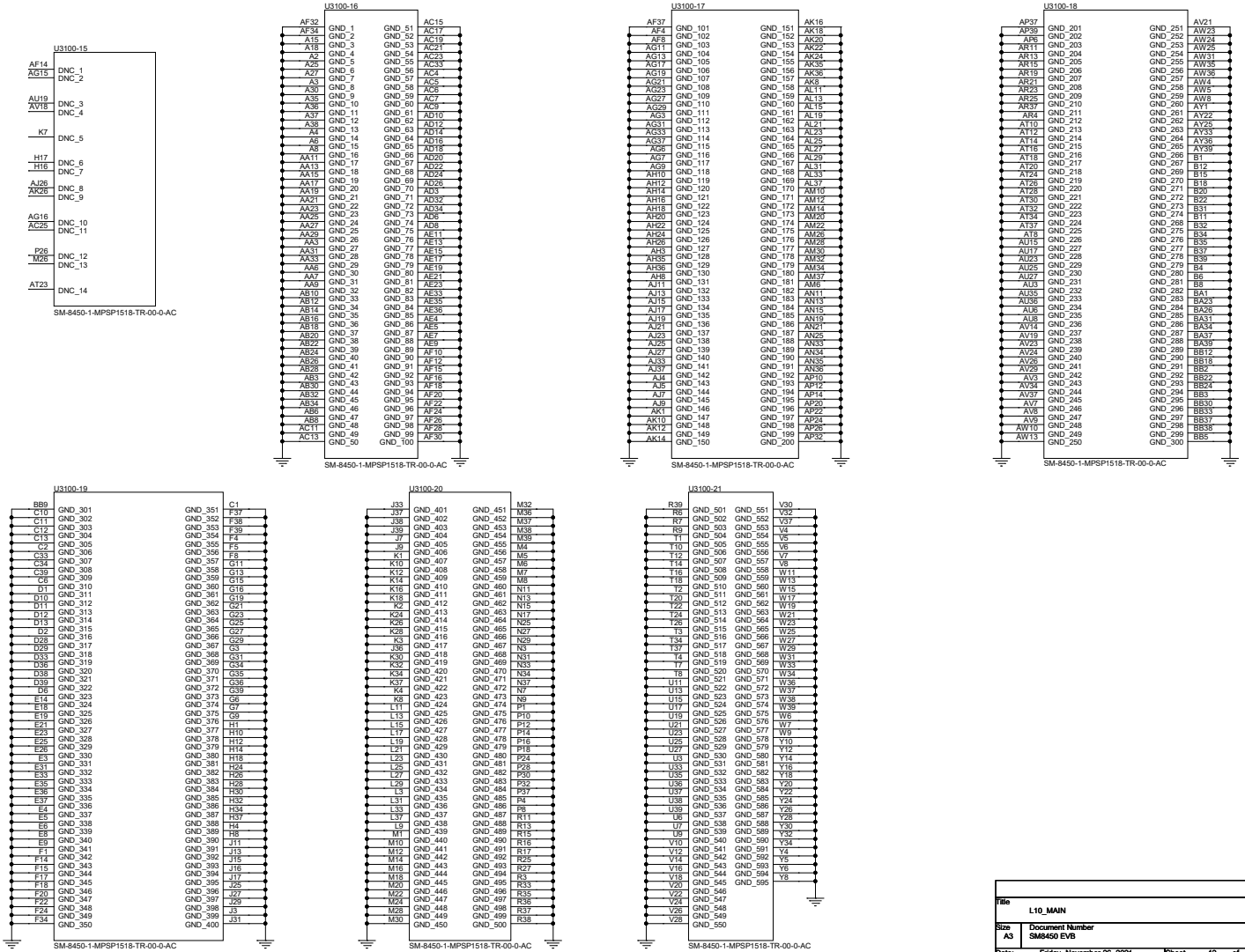

Title	L10_MAIN		
Size A3	Document Number SM8450 EVB		Rev P0
Date: Friday, November 26, 2021		Sheet 42 of 75	

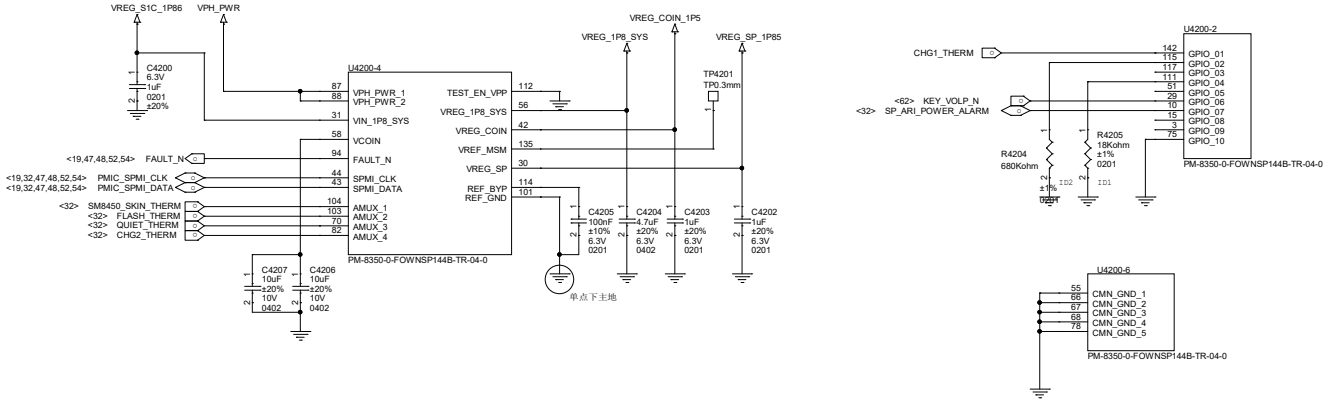

Title	L10_MAIN	
Size A3	Document Number PM8350 XO&CTRL	Rev P0
Date: Friday, November 26, 2021	Sheet 43 of 75	

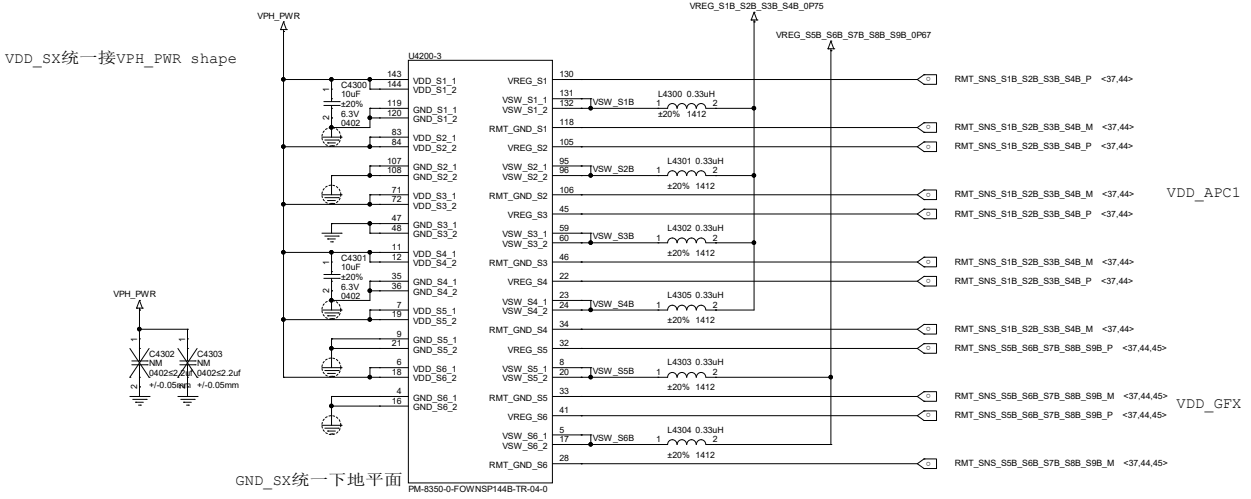

Title	L10_MAIN		
Size A3	Document Number SM8450 EVB		Rev P0
Date: Friday, November 26, 2021		Sheet 44 of 75	

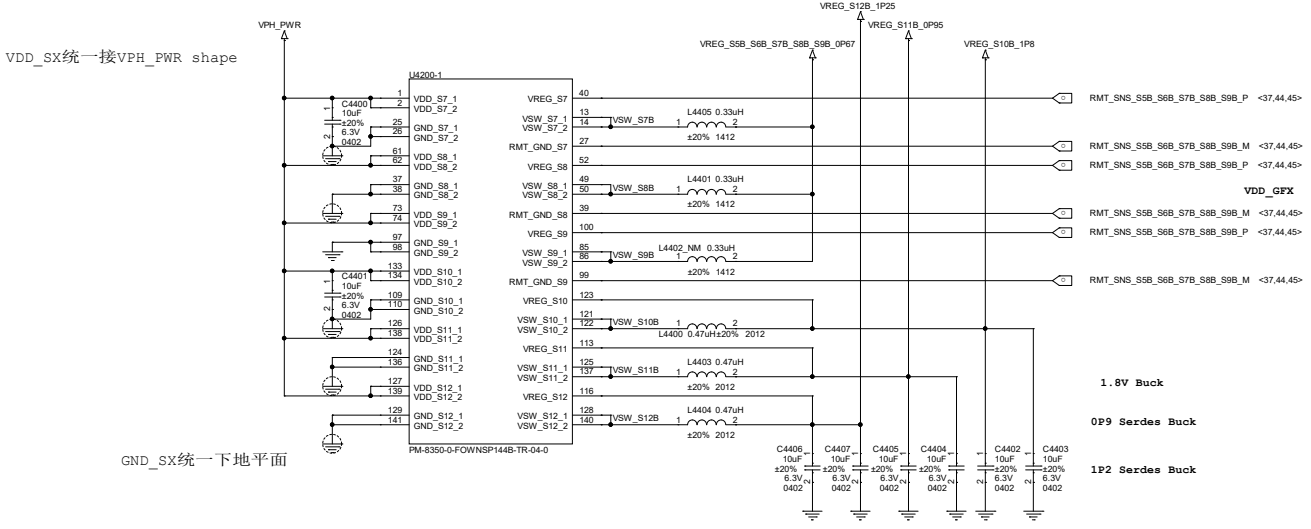

Title	L10_MAIN	
Size A3	Document Number SM8450 EVB	Rev P0
Date: Friday, November 26, 2021	Sheet 45 of 75	

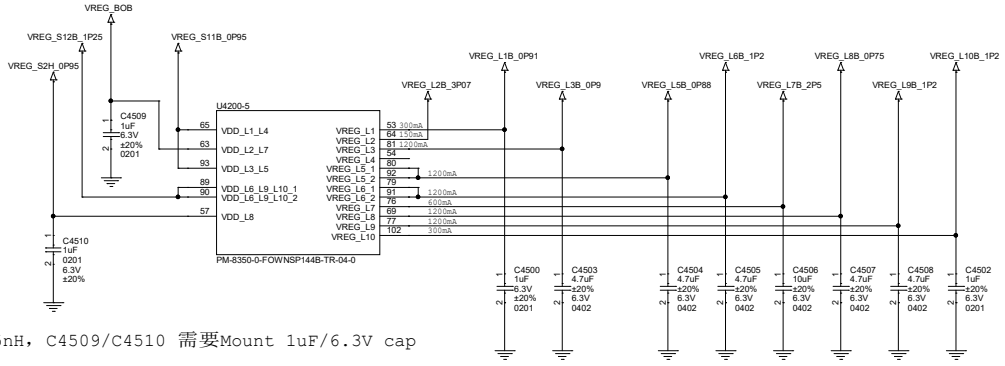

输入ESL大于15nH，C4509/C4510 需要Mount 1uF/6.3V cap

Title	L10_MAIN	
Size A3	Document Number PM8350 LDOs	Rev P0
Date: Friday, November 26, 2021	Sheet 46 of 75	

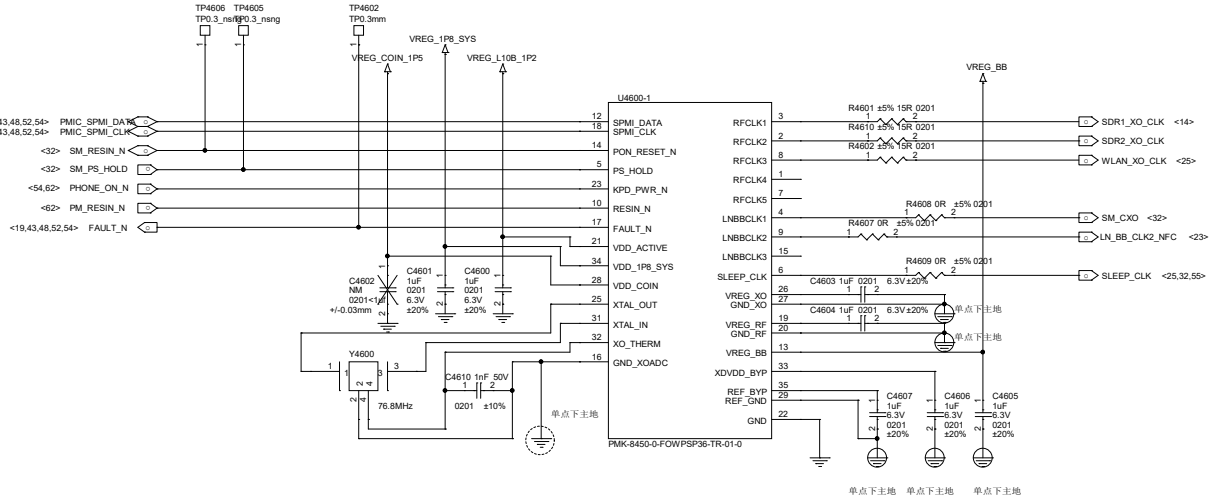

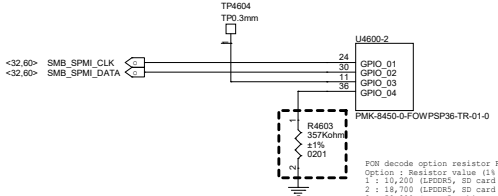


```
PON decode option resistor R4603
Option : Resistor value (1% series)
1 : 10,200 (LPDDR5, SD card LDO enabled, GPIO05B Active LOW)
2 : 18,700 (LPDDR5, SD card LDO enabled, GPIO05B Active HIGH)
3 : 52,300 (LPDDR5, Skip SD card LDO enable, GPIO05B Active LOW)
4 : 68,100 (LPDDR5, Skip SD card LDO enable, GPIO05B Active HIGH)
5 : 147,000 (LPDDR4X, SD card LDO enabled, GPIO05B Active LOW)
6 : 191,000 (LPDDR4X, SD card LDO enabled, GPIO05B Active HIGH)
7 : 357,000 (LPDDR4X, Skip SD card LDO enable, GPIO05B Active HIGH)
8 : Open (LPDDR4X, Skip SD card LDO enable, GPIO05B Active LOW)
```

Title	L10_MAIN	
Size A3	Document Number SM8450 EVB	Rev P0
Date: Friday, November 26, 2021	Sheet 47 of 75	

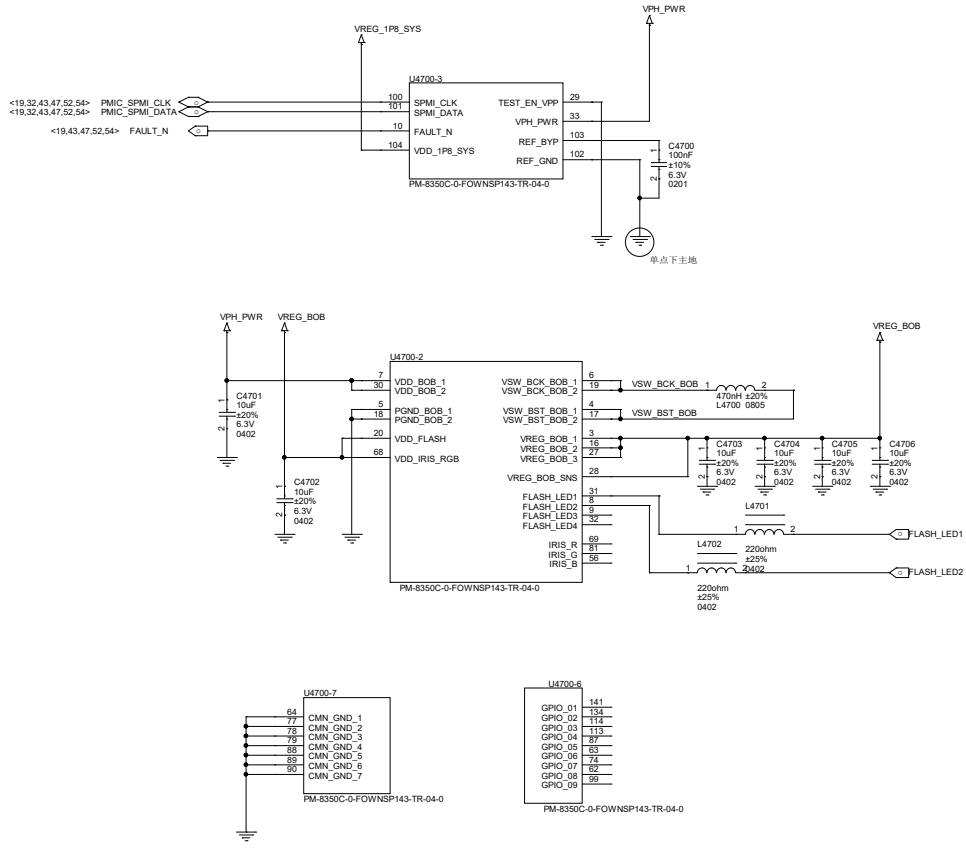

Title: L10_MAIN		
Size: A3	Document Number: PM8350C CTRL&GND	Rev: P0
Date: Friday, November 26, 2021	Sheet 48 of 75	

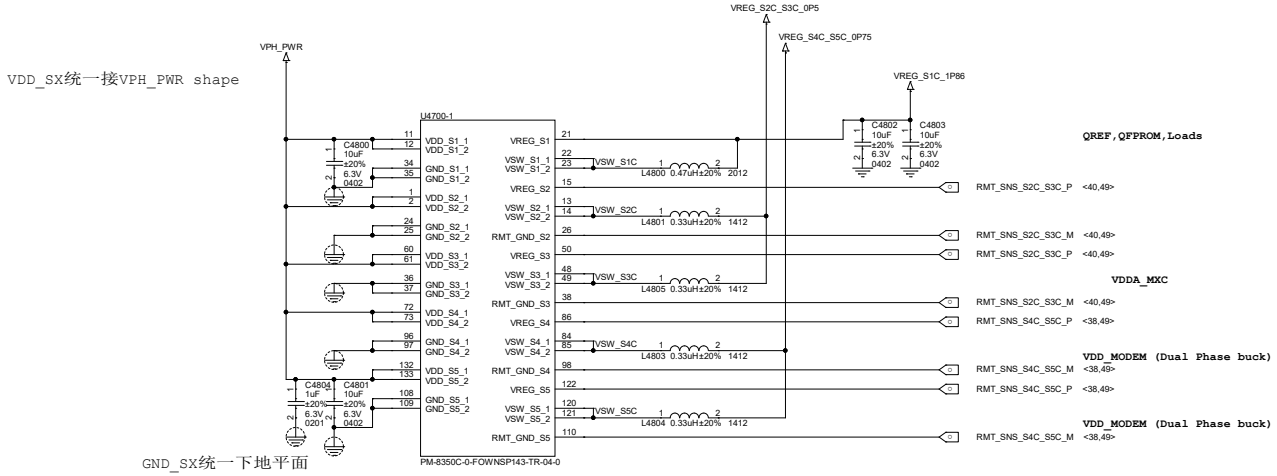

Title	L10_MAIN	
Size A3	Document Number SM8450 EVB	Rev P0
Date: Friday, November 26, 2021	Sheet 49 of 75	

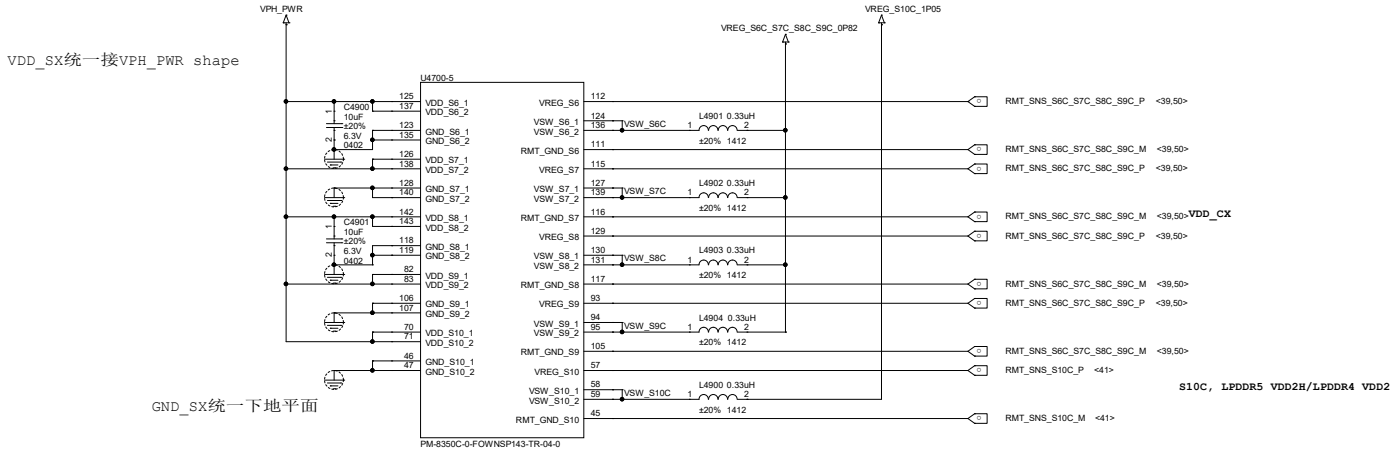

Title	L10_MAIN		
Size A3	Document Number SM8450 EVB		Rev P0
Date: Friday, November 26, 2021	Sheet 50 of 75		

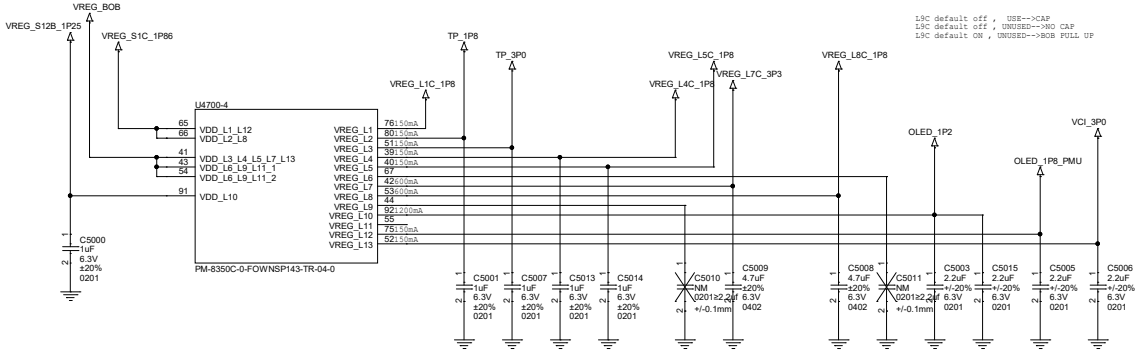

Title	L10_MAIN	
Size A3	Document Number PM8350C LDOs	Rev P0
Date: Friday, November 26, 2021	Sheet 51 of 75	

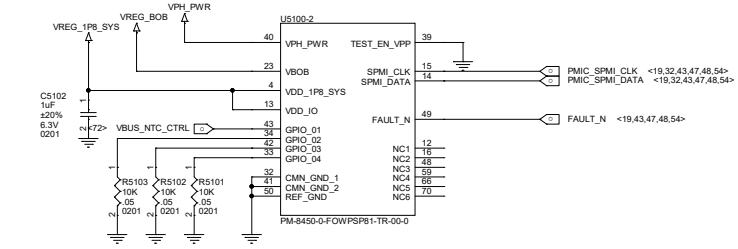

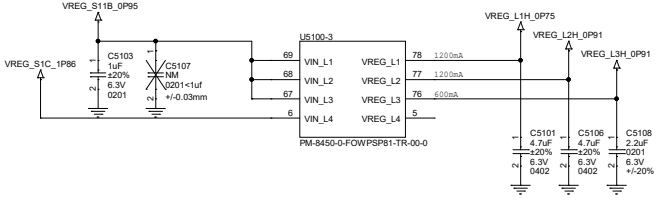

Title: L10_MAIN		
Size: A3	Document Number: PM8450 HK IO&LDO	Rev: P0
Date: Friday, November 26, 2021	Sheet: 52 of 75	

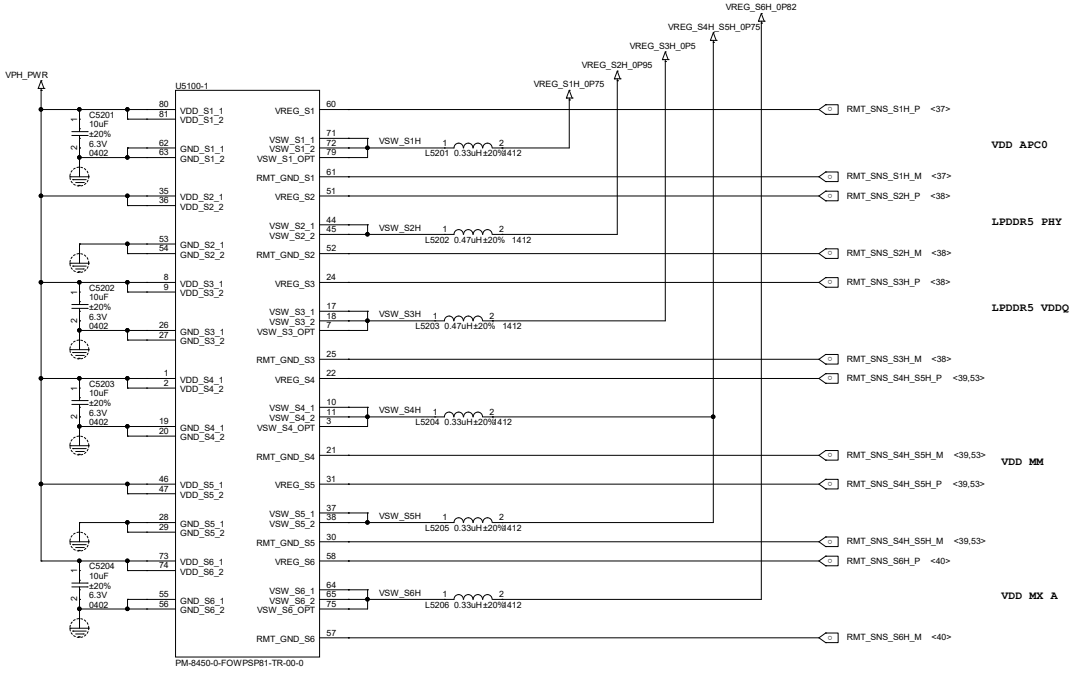

Title	L10_MAIN		
Size A3	Document Number SM8450 EVB		Rev P0
Date: Friday, November 26, 2021	Sheet 53 of 75		

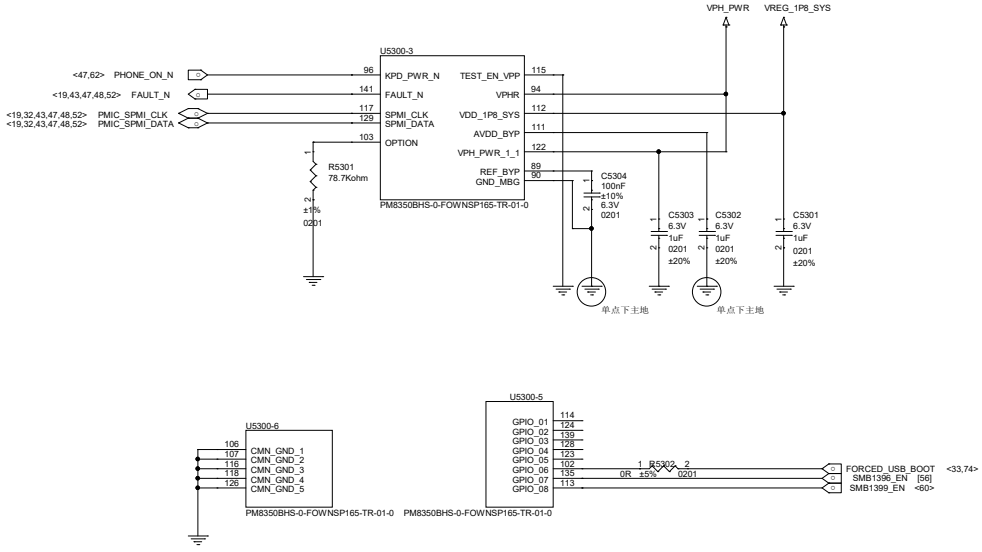

Title: L10_MAIN			
Size: A3	Document Number: PM8350B CTRL&GND		Rev: P0
Date: Friday, November 26, 2021	Sheet 54 of 75		

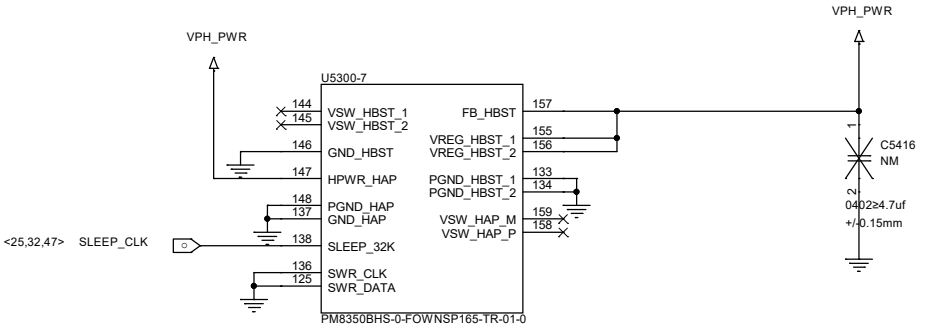

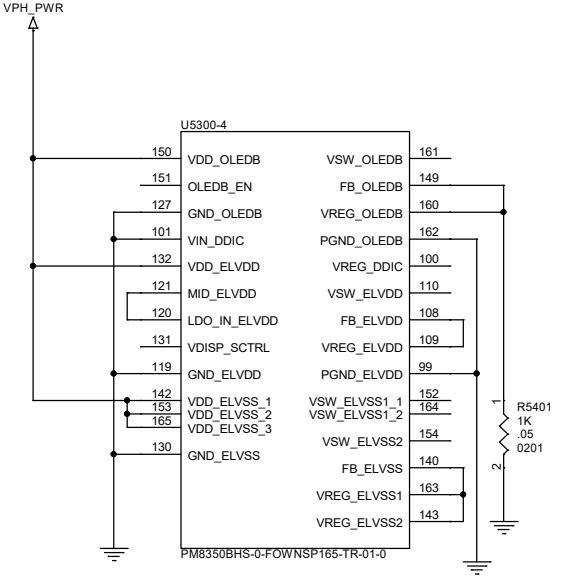

Title	L10_MAIN		
Size A4	Document Number PM8350B HAPTIC&OLED		Rev P0
Date: Friday, November 26, 2021		Sheet 55 of 75	

PM8350B---1S BATTERY ,low voltage VIBRATOR DRIVER
PM8350BH---1S BATTERY ,high voltage VIBRATOR DRIVER
PM8350BHS---2S BATTERY ,high voltage VIBRATOR DRIVER

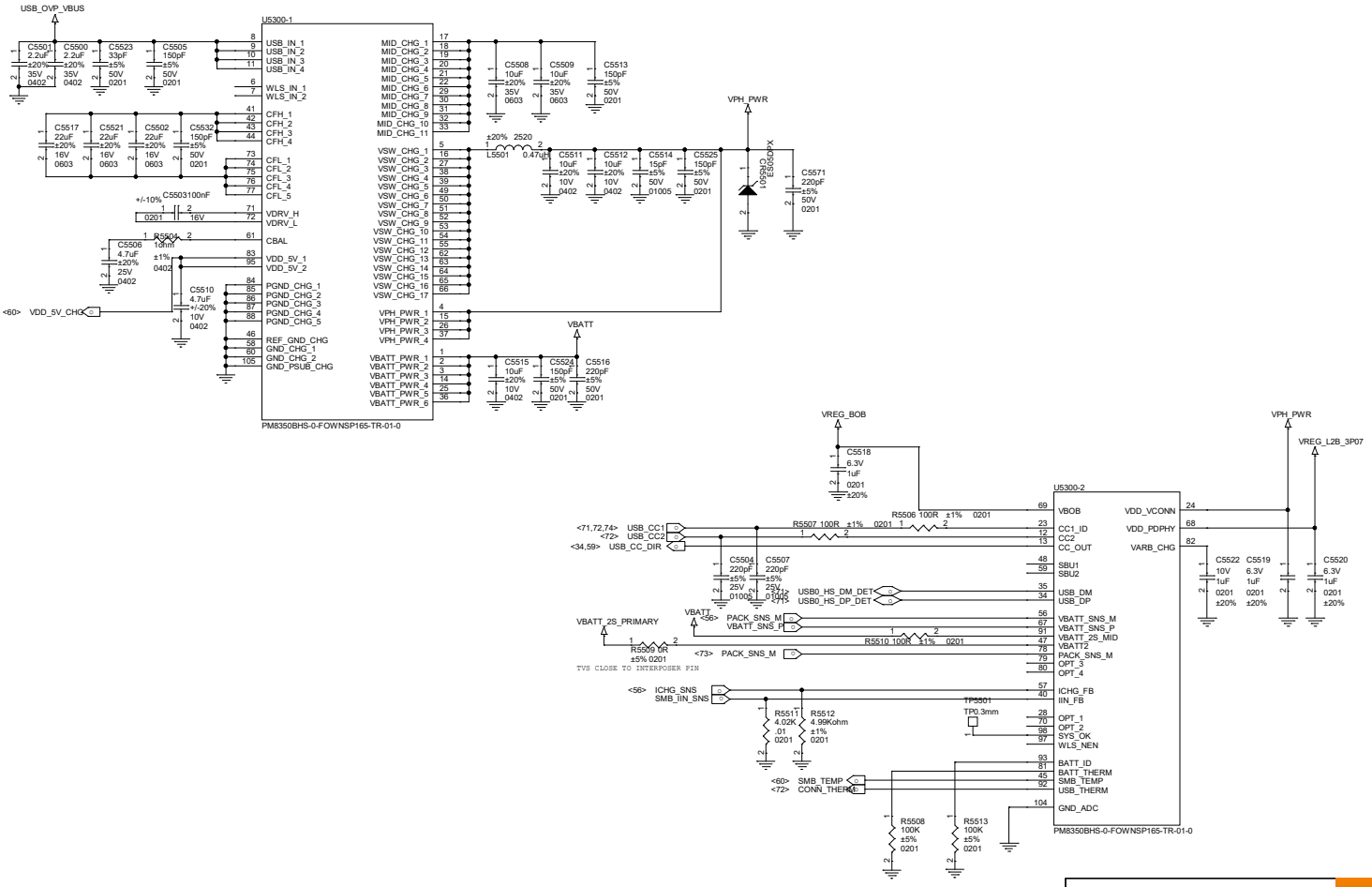

Title	L10_MAIN	
Size A3	Document Number PM8350B Charger	Rev P0
Date: Friday, November 26, 2021	Sheet 56 of 75	

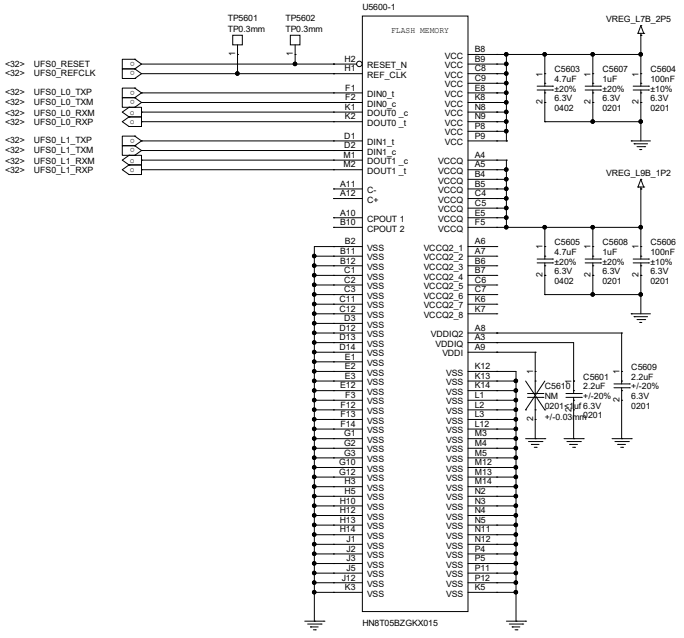

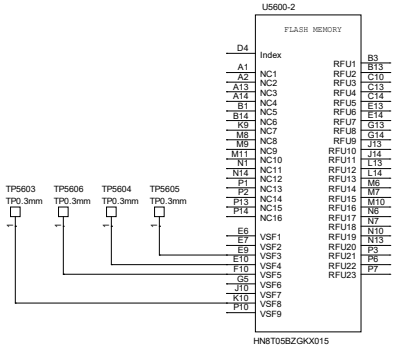

Title: L10_MAIN		
Size: A3	Document Number: SM8450 EVB	Rev: P0
Date: Friday, November 26, 2021	Sheet: 57 of 75	

放在中间路径gnd环境好的位置

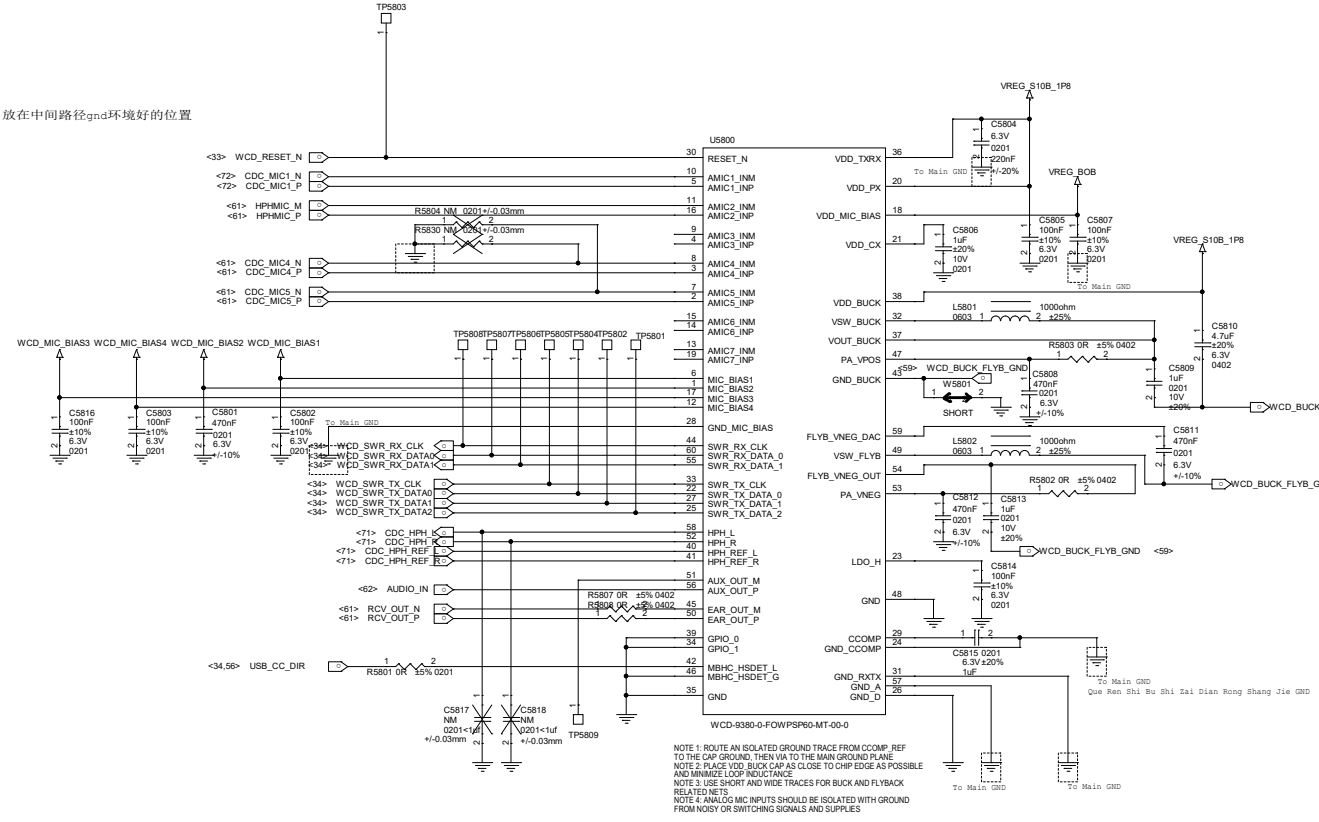

NOTE 1: ROUTE AN ISOLATED GROUND TRACE FROM CCOMP_REF TO THE CAP GROUND, THEN VIA TO THE MAIN GROUND PLANE
NOTE 2: PLACE VDD_BUCK CAP AS CLOSE TO CHIP EDGE AS POSSIBLE AND MINIMIZE LOOP INDUCTANCE
NOTE 3: USE SHORT AND WIDE TRACES FOR BUCK AND FLYBACK RELATED NETS
NOTE 4: ANALOG MIC INPUTS SHOULD BE ISOLATED WITH GROUND FROM NOISY OR SWITCHING SIGNALS AND SUPPLIES

Title: L10_MAIN		
Size: A3	Document Number: WCD9380	Rev: P0
Date: Friday, November 26, 2021	Sheet: 59 of 75	

SMB1399

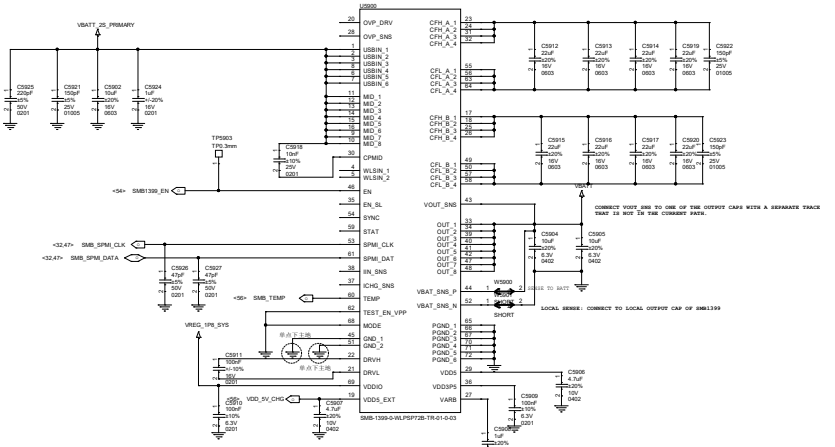

Title:	L10_MAIN		
Size: A2	Document Number: SC8561		Rev: P0
Date: Wednesday, December 01, 2021	Sheet 60 of 75		

HEADSET

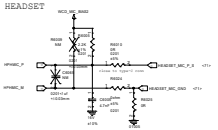

R6029、R6004、C6005靠近WCD9385（U5800）端放置

TOP MIC

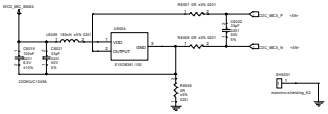

AUX MIC

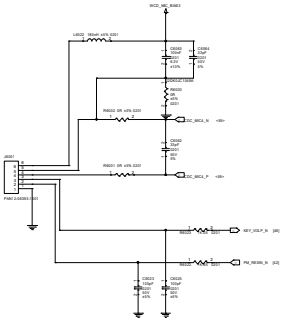

SPKR PA TL

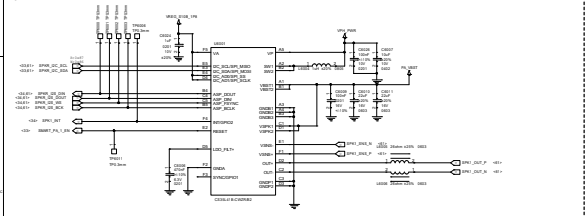

SPKR PA TH

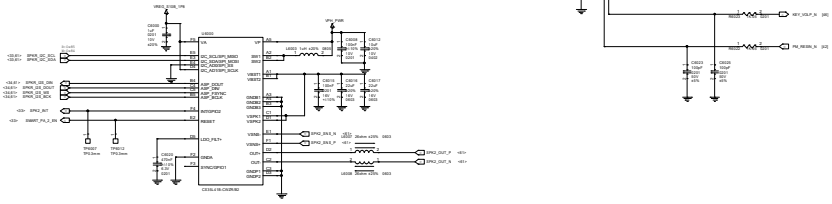

SPKR PA BL

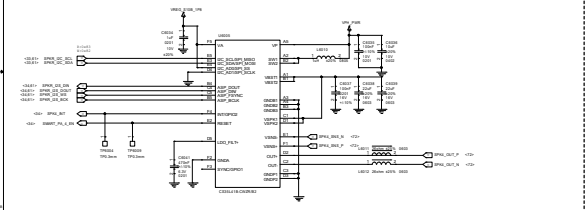

SPKR PA BH

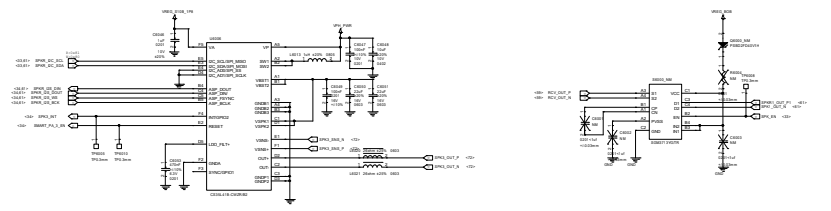

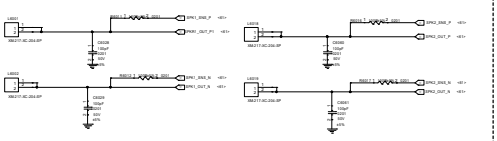

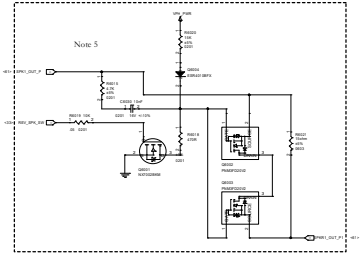

Title: L10_SMA

Size: A3

Date: Friday, December 11, 2020

A+G

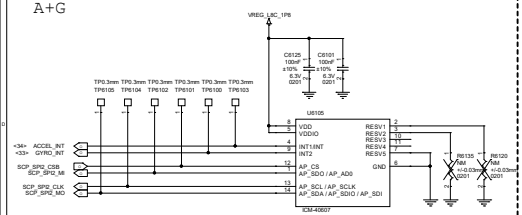

P_L-sensor

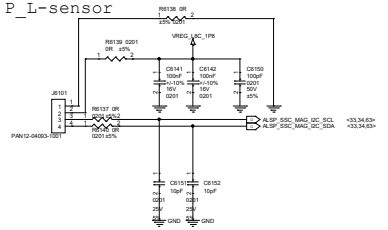

PRESSURE

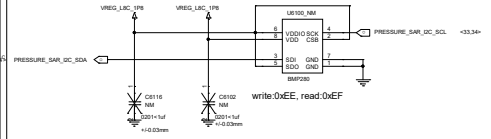

HALL

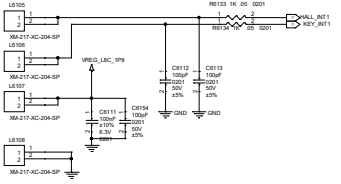

Sidekey

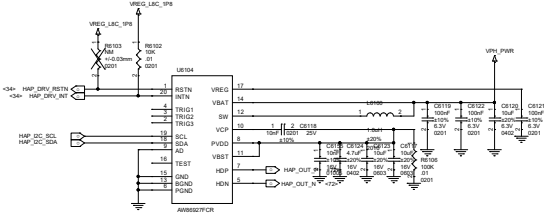

RGB DRIVER

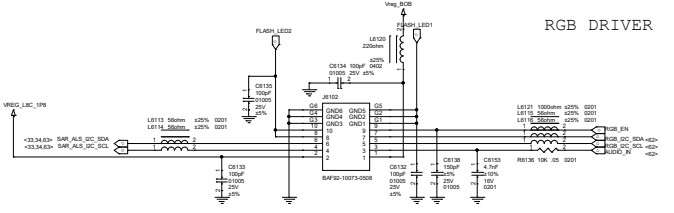

FLASH temperature thermistor

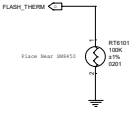

Title	L10_MAIN		
Size A2	Document Number SENSOR		Rev P0
Date: Friday, November 26, 2021		Sheet 62 of 75	

FP

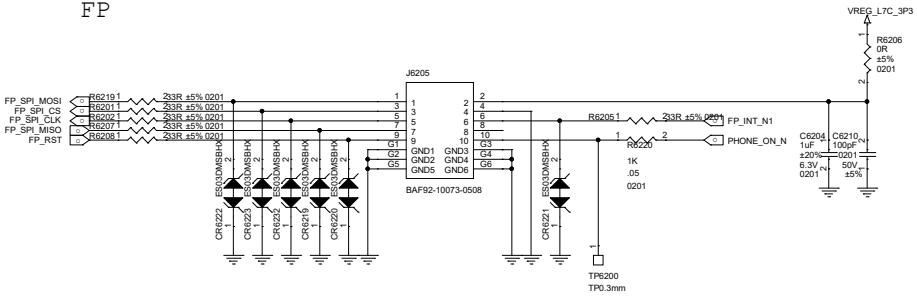

COMPASS

COMPASS

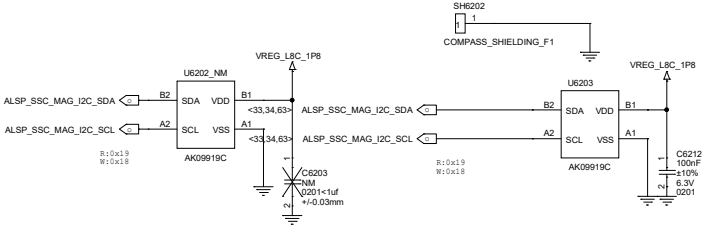

INFRARED

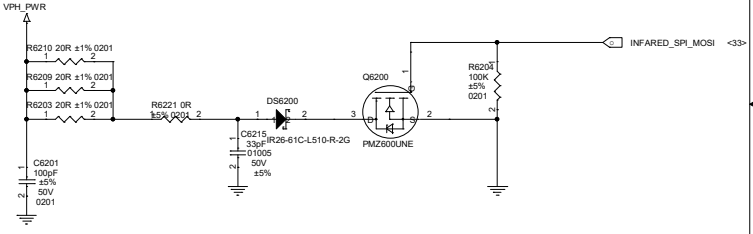

Title	L10_MAIN	
Size A3	Document Number SENSOR-2	Rev P0
Date: Friday, November 26, 2021	Sheet 63 of 75	

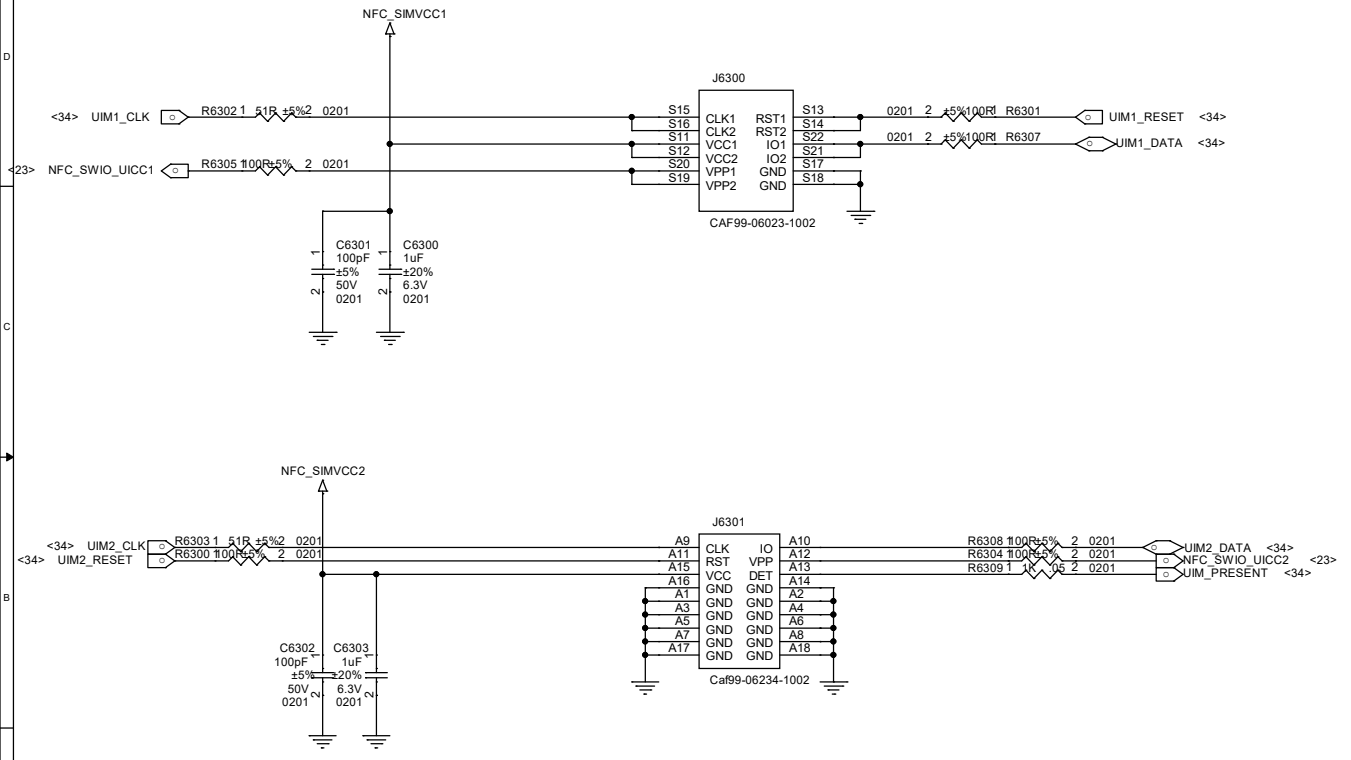

Title	L10_MAIN	
Size A4	Document Number SIM	Rev P0
Date: Friday, November 26, 2021	Sheet 64 of 75	

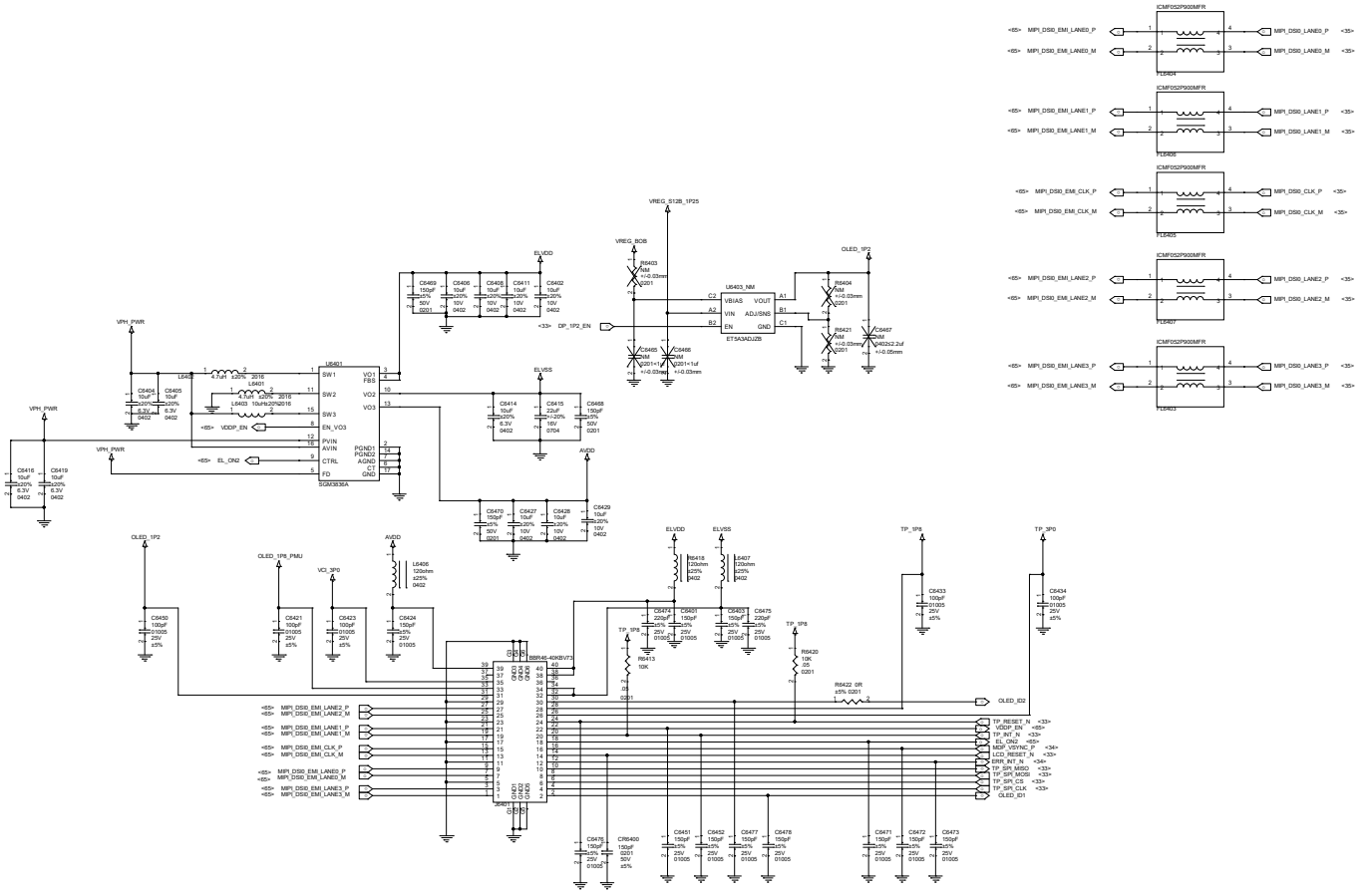

Title	L10_MAIN
Size A2	Document Number ANCILED
Rev PQ	
Date: Friday, November 26, 2021	Sheet 65 of 75

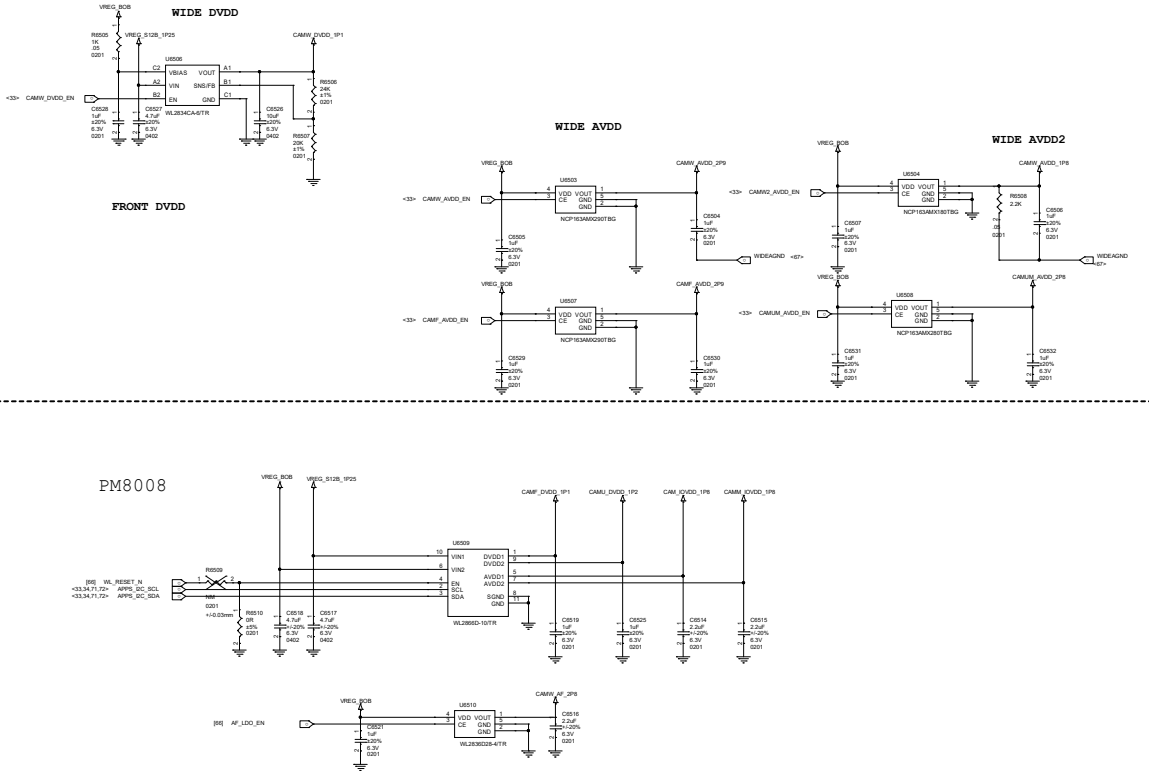

Title	L10_MAIN		
Size A2	Document Number PM8008 & CAMERA LDOs		Rev PQ
Date: Friday, November 26, 2021		Sheet 66 of 75	

WIDE 64M IMX686

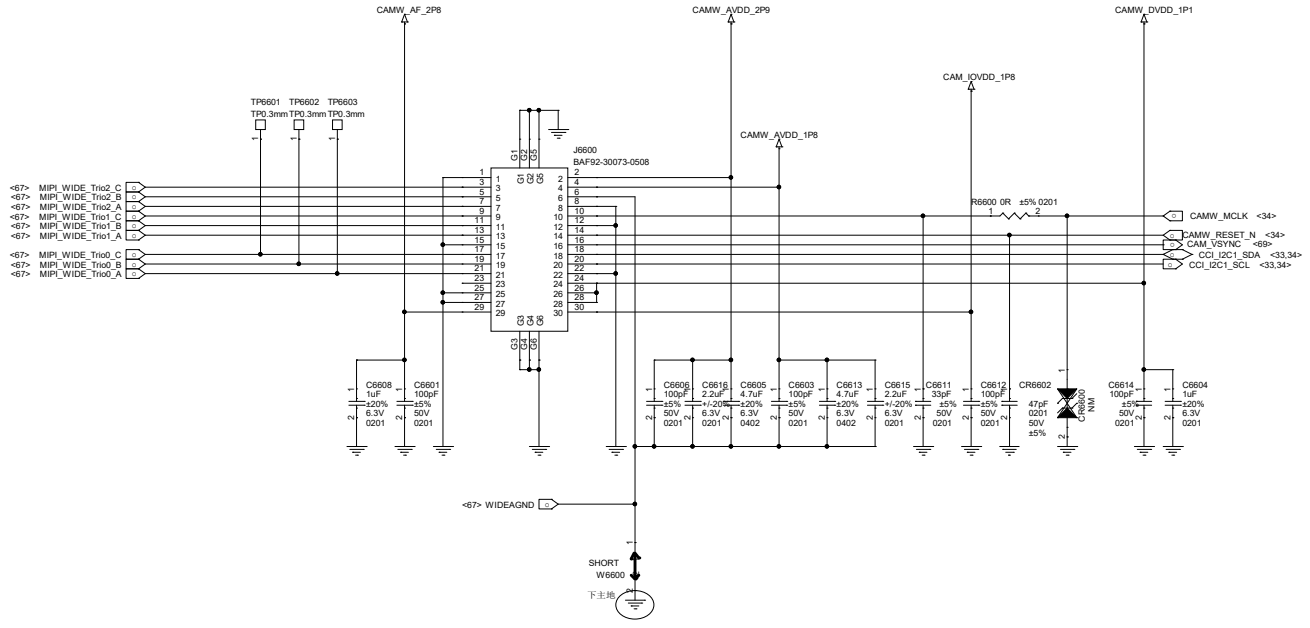

Title:	L10_MAIN
Size: A3	Document Number: WIDE&TELE CAMERA
Rev: P0	
Date: Friday, November 26, 2021	Sheet: 67 of 75

front 16M S5K3T2

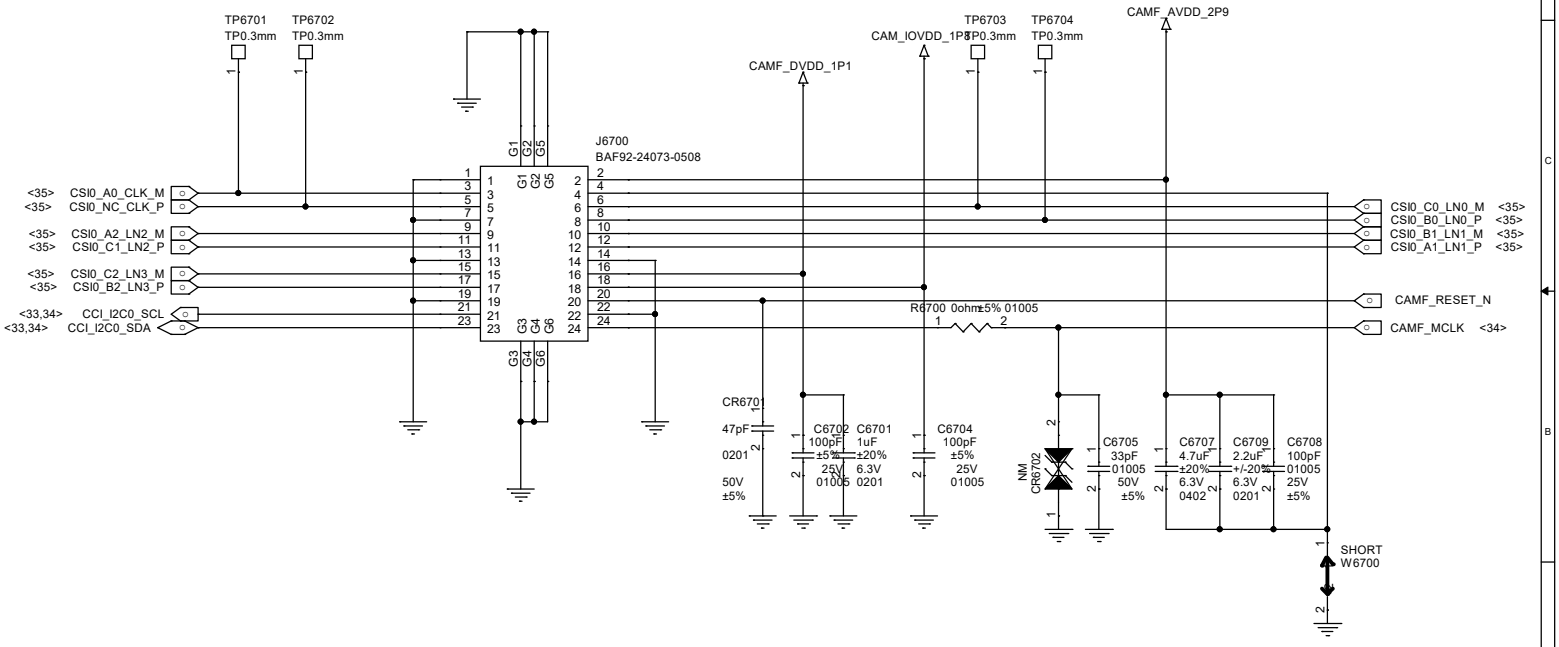

Title	L10_MAIN	
Size A4	Document Number Reserved(for Analog FM)	Rev P0
Date: Friday, November 26, 2021	Sheet 68 of 75	

ULTRA 8M IMX355

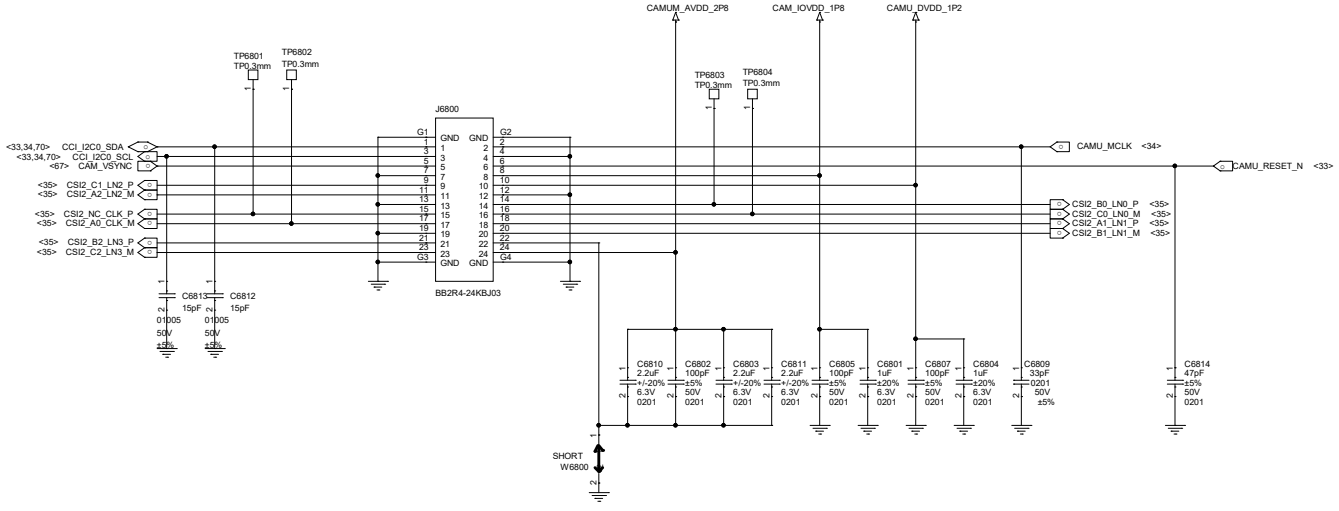

Title: L10_MAIN		
Size: A3	Document Number: ULTRA CAMERA	Rev: P0
Date: Friday, November 26, 2021	Sheet: 69 of 75	

MACRO 2M

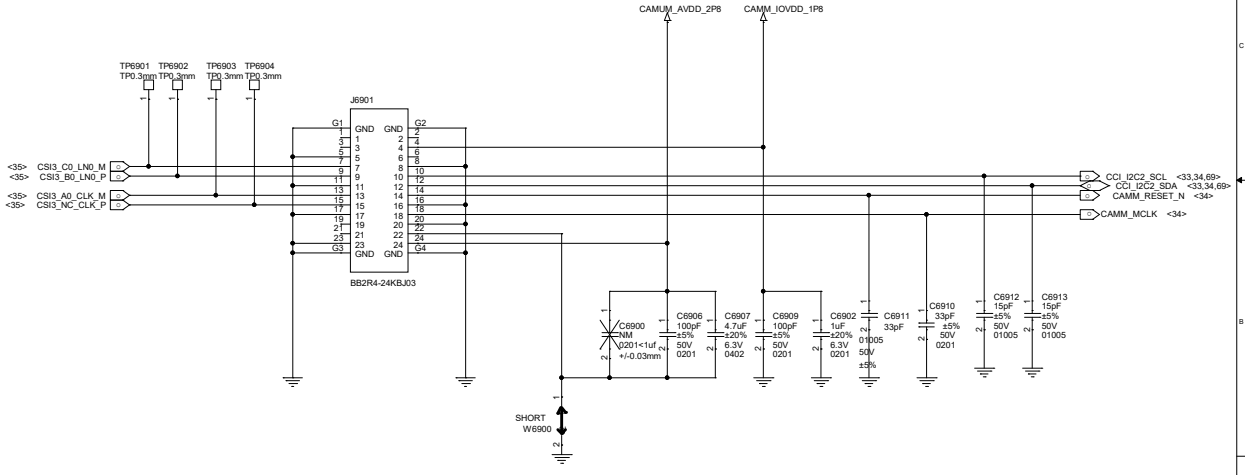

Title: L10_MAIN		
Size: A3	Document Number: ULTRA CAMERA	Rev: P0
Date: Friday, November 26, 2021	Sheet 70 of 75	

SEC_BAT_BtoB

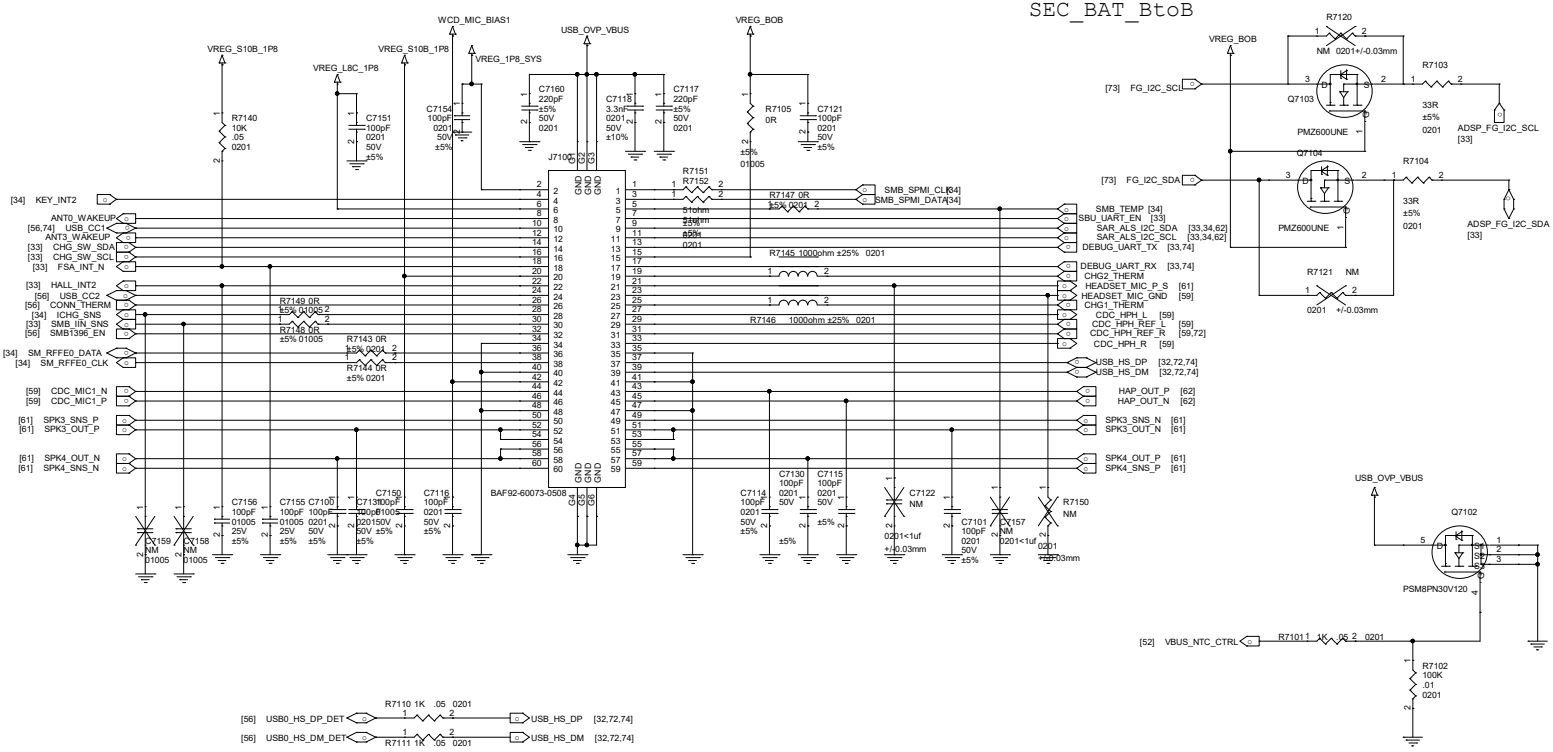

Title	L10_MAIN	
Size A3	Document Number BTB	Rev P0
Date: Wednesday, December 01, 2021	Sheet 72 of 75	

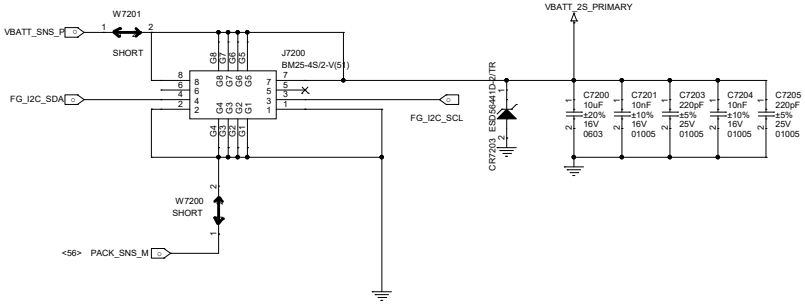

Title: L10_MAIN		
Size: A3	Document Number: WL POWER	Rev: P0
Date: Friday, November 26, 2021	Sheet: 73 of 75	

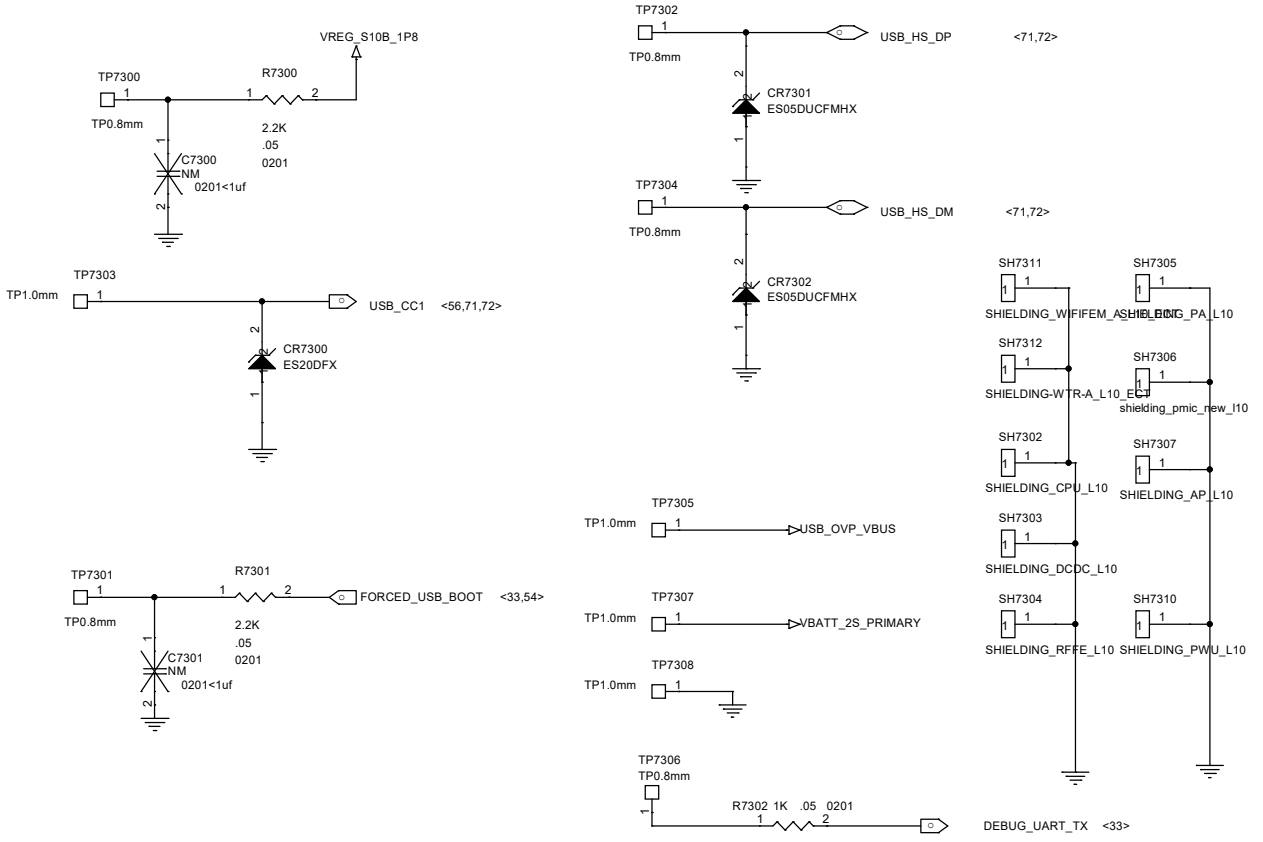

Title	L10_MAIN	
Size A4	Document Number TEST POINT	Rev P0
Date: Friday, November 26, 2021	Sheet 74 of 75	

ANT6_MHB+N77

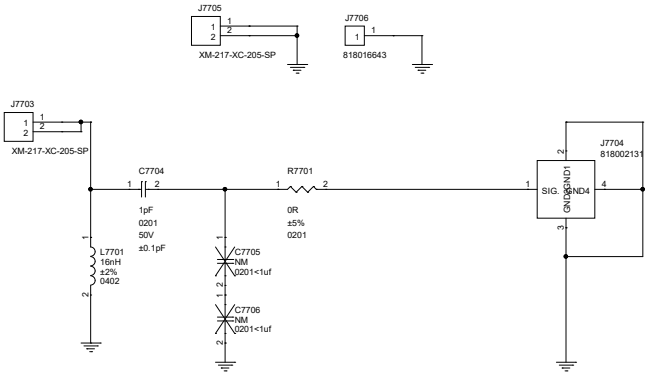

ANT16_WIFI2.4G+6E

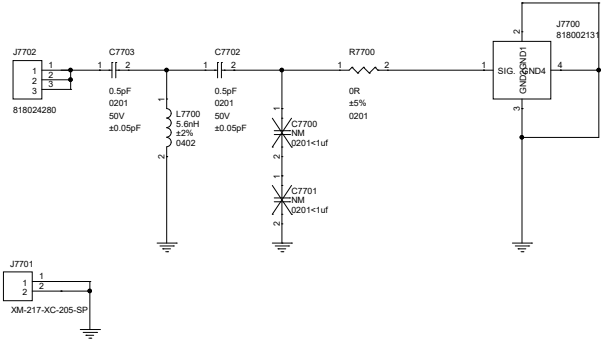

ANT16_WIFI2.4G+6E

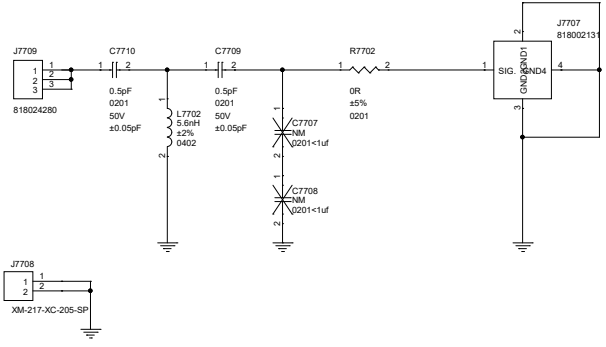

Title	L10_MAIN	
Size A3	Document Number ANT-diversity	Rev P0
Date: Friday, November 26, 2021	Sheet 75 of 75	